Catalogue

Installation Systems

fischer

innovative solutions

Dear partners,

Advancements in technology, increasing restrictions and growing demands in terms of comfort and sustainability are placing high demands on building technology. Installations are becoming more and more complex. The secure guidance and attachment of media lines plays a particularly important role here. This is why we have developed our range of installation and fixing elements for building technology. In doing so, we have taken lots of practical experience into consideration to make your work easier.

In our main catalogue of installation systems, we have put together a wide range of MEP installations in a clearly laid out format. In addition our products for electrical installation, fixing elements for sanitary, a selection from our range of plugs as well as passive fire protection products are also listed in the catalogue. Each chapter shows the items required for one system. The layout of the catalogue quickly guides you to the components required in each case.

Our extended range of installation systems offers you safe, efficient and easy-to-assemble solutions for the fixing of pipe support lines in domestic construction, as well as for infrastructure projects and industrial buildings.

The fischer universal installation system FUS meets the highest requirements for fixing medium to heavy loads. The FUS installation system is now also available in hot dip galvanised coating in hot dip galvanised coating, which further expands the scope of application. Our new fischer light installation channel system FLS complements the range as an optimal solution for fixing light loads. The multifunctional components save you from buying, storing and attaching several individual parts – thus saving you time and energy during installation.

Our discussions with you always provide us with major incentives for continuously improving our products, processes and services. Feel free to come to us with your suggestions at any time.

We look forward to continuing our successful collaboration.

Christian Knoll
Managing Director fischer SystemTec

Good reasons to choose fischer

A brand and its promise to perform

„Whoever chooses fischer receives more than a range of safe products. The aim is to always develop the best solutions for our customers across the globe."

Besides the innovative products, this predominantly concerns support that is focused on the customer, and services designed to improve customer benefit.

Continious improvement

With the fischer ProcessSystem (fPS), we ensure that we are adapting and optimising our processes in line with customer requirements in a flexible manner and on a continuous basis. Thus we are glad having been awarded with the 1. place "Excellence in Operations" within the challenging contest "Factory of the Year".

DIE FABRIK DES JAHRES
Global Excellence in Operations
Produktion ATKearney

Award 2016
Exellence in Operations

Always with its finger on the pulse of the times

At fischer, innovation is more than just a sum of the patents. We are open to new things and are prepared for change – always with the aim of offering our customers the greatest possible benefits. Over the years, our own development and production sites have been developing numerous fixing solutions for the most wide-ranging applications.

Be it new production procedures or materials, such as renewable raw materials: We are carrying out the research for your safety and will continue to do so in the future. This gives us such great flexibility that we can even develop tailor-made customer solutions. This power to innovate has seen fischer become market leader in anchor technology and the fixing industry.

Safety that connects – Decisive quality

We don't make any compromises when it comes to the safety of our products. A whole host of our products are distinguished by comprehensive, up-to-date and international approvals. The fischer product range is well-positioned in all sectors of fixing technology – Steel, Nylon and Chemical fixings. In award-winning quality which continues to impress both professional clients and private customers with equal measure.

ICC ES ESR-1990 — See ICC-ES Evaluation Report at www.icc-es.org
ETA CE

International approvals characterise many of our products

We take responsibility

Our active environment management policy means that we are helping to maintain an intact environment for our generation and for those that follow. The environment management policy at the Tumlingen site has been certified in line with DIN EN ISO 14001.

We are a member of the German Sustainable Building Council (DGNB), and our products have been successively certified in line with the guidelines provided by the Institute for Construction and the Environment (IBU). With our greenline products, we have introduced the first fixing assortment in the market, based on over 50% of regrowing raw materials.

BIOBASED 50 - 85 %
DIN Geprüft
8C029

UX GREEN based on over 50 % of regrowing raw materials

Our service to you

We are a reliable partner, one that will stand at your side and address your individual requirements with advice and action:

- Our products range from **chemical systems to steel anchors** through to **plastic anchors.**
- **Competence and innovation** through own research, development and production.
- **Global presence** and active sales service in over 100 countries.
- **Qualified technical consulting** for economical and compliant fastening solutions. Also on-site at the construction site requested.
- **Training sessions,** some with accreditation, at your premises or at the fischer academy.
- **Design and construction software** for demanding applications.

fischer 360°-Service

Content

Products – Detailed overview	**8**	1
Installation system galvanised		2
Pipe clamps	20	2a
Channel system FLS	60	2b
Channel system FUS	88	2c
Installation grid	138	2d
Fixpoint and sliding elements	150	2e
Airduct and metal roof fixings	160	2f
Accessories	170	2g
Installation system FUS hot-dip galvanised	**194**	3
Installation system stainless steel	**240**	4
Air conditioner fixings	**252**	5
Electrical fixings	**258**	6
Sanitary fixings	**288**	7
Plugs and anchors	**298**	8
Fire protection systems FireStop	**338**	9
Basic knowledge	**348**	10
Services	**370**	11

Pipe clamps

Product		Qualification			Type of pipes			Example of pipes	Page
Type	Image	Fire tested	VdS-approved	FM-approved	light pipes	medium heavy pipes	heavy pipes		
Hinged pipe clamp FGRS Plus					●	○	–	heating pipes, drinking water and service water pipes, medical gas supply	**22**
Hinged pipe clamp FGRS					●	○	–	heating pipes, drinking water and service water pipes, medical gas supply	**24**
Hinged pipe clamp FKS Plus for plastic pipes					●	○	–	heating pipes, drinking water and service water pipes	**26**
Pipe clamp FRS Plus					○	●	–	heating pipes, drinking water and service water pipes, process pipes for gases and liquids	**28**
Pipe clamp FRS-L Universal		✓			●	○	–	heating pipes, drinking water and service water pipes, medical gas supply	**30**
Pipe clamp FRS Triple					○	●	–	gas and compressed air pipes, process pipes for gases and liquids	**32**
Pipe clamp FRS		✓			○	●	–	heating pipes, drinking water and service water pipes, process pipes for gases and liquids	**34**
Silicone pipe clamp FRSH					○	●	–	steam pipes	**36**
Pipe clamp FRSN Triple					○	●	–	gas and compressed air pipes, process pipes for gases and liquids	**38**
Pipe clamp FRSN					○	●	–	gas and compressed air pipes, process pipes for gases and liquids	**40**
Heavy duty pipe clamp FRSM – inch					–	●	○	heating pipes, Process pipes for gases and liquids	**42**
Heavy duty pipe clamp FRSM – metric					–	○	●	heating pipes, Process pipes for gases and liquids	**44**
Refrigeration pipe clamp FRS K					○	●	–	cooling pipes	**46**
Refrigeration pipe clamp KFT					–	●	○	cooling pipes	**48**
Sprinkler clamp FRSP				✓	○	●	○	sprinkler pipes	**52**
Sprinkler clamp FRSL			✓		○	●	○	sprinkler pipes	**54**
U-Clamp FUBD					●	○	–	gas and compressed air pipes, process pipes for gases and liquids	**56**
U-bolt ETR					○	●	○	sprinkler pipes, gas and compressed air pipes	**51**
Hose clamp SGS					●	○	–	rubber pipes	**58**

○ possible ● recommended – not recommendable

fischer innovative solutions

Channel system FLS

Product		Qualification	Type of pipes			Example of pipes	Page
Type	Image	fire tested	light pipes	medium heavy pipes	heavy pipes		
Channel FLS		✓	●	○	–	heating pipes, air ventilation, drinking water and service water pipes, Medical gas supply	**62**
FLS Cutting Tool							**65**
Cantilever arm ALK		✓	●	○	–	process pipes for gases and liquids, cable trays	**67**
Cover cap AK			●	○	–		**69**
Angle brace WS 31– 45°			●	○	–	heating pipes, drinking water and service water pipes, cable trays	**70**
Channel connector SV 31	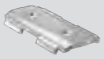		●	○	–		**72**
Sliding channel nut FSM Clix P		✓	●	○	–	heating pipes, drinking water and service water pipes, medical gas supply	**74**
Sliding channel nut FSM Clix M		✓	●	○	–	heating pipes, drinking water and service water pipes, medical gas supply	**76**
T-head bolt FHS Clix		✓	●	○	–	heating pipes, drinking water and service water pipes, medical gas supply	**78**
Channel washer HK 31		✓	●	○	–		**86**
Saddle flange SF Clix 31			●	○	–		**80**
Angle bracket MW Clix 90°			●	○	–		**82**
Angle bracket MW and MWU			●	○	–		**84**
Beam clamp TKR 31			●	○	–		**87**

○ possible ● recommended – not recommendable

Channel system FUS

Product		Qualification	Type of pipes			Example of pipes	Page
Type	Image	fire tested	light pipes	medium heavy pipes	heavy pipes		
Channel FUS		✓	○	●	○	heating pipes, drinking water and service water pipes, gas and compressed air pipes	**90**
Cantilever arm FCA		✓	–	●	○	process pipes for gases and liquids, cable trays	**99**
Large cantilever arm FCAM			–	●	●	heating pipes, Cooling pipes, process pipes for gases and liquids	**103**
Cover cap FEC			–	–	–		**104**
Push-through connector PFCN 41			○	●	○		**105**
Connector FCN Clix P and FCN Clix M		✓	○	●	○	heating pipes, drinking water and service water pipes, medical gas supply	**117**
T-head bolt FHS Clix S			○	●	○	heating pipes, drinking water and service water pipes, medical gas supply	**119**
Channel nut FCSN			○	●	○	heating pipes, drinking water and service water pipes, medical gas supply	**121**
Channel nut FCN			○	●	○	ventilation pipes, gas and compressed air pipes	**123**
Channel washer HK 41		✓	○	●	○		**124**
Channel connector FUF OC and PFUF OC			○	●	○	heating pipes, drinking water and service water pipes, gas and compressed air pipes	**96**
FDCC			○	●	○		**97**
Saddle flange PSF			○	●	○	heating pipes, drinking water and service water pipes, gas and compressed air pipes	**107**
Universal bracket PUWS			○	●	○	heating pipes, drinking water and service water pipes, gas and compressed air pipes	**108**
Angle bracket PWK			○	●	○	heating pipes, drinking water and service water pipes, gas and compressed air pipes	**109**
Variable bracket PVB			○	●	○		**110**
Bracing elements PSAE			○	●	○		**111**
Bracket PFFF			○	●	○	heating pipes, drinking water and service water pipes, gas and compressed air pipes	**113**
Bracket PFAF			○	●	○	heating pipes, drinking water and service water pipes, gas and compressed air pipes	**114**

○ possible ● recommended – not recommendable

fischer innovative solutions

Channel system FUS

Product		Qualification	Type of pipes			Example of pipes	Page
Type	Image	fire tested	leichte Leitung	medium heavy pipes	heavy pipes		
Bracket PFUF			○	●	○	heating pipes, drinking water and service water pipes, gas and compressed air pipes	**115**
Bracket PFUF D			○	●	○	heating pipes, drinking water and service water pipes, gas and compressed air pipes	**116**
Saddle flange SF		✓	–	●	○		**125**
Mounting bracket UWS		✓	–	●	○		**126**
Mounting bracket FAF			○	●	○		**135**
Flanges FZF			–	●	○		**136**
Bracket FFF			○	●	○		**134**
Variable bracket VB			○	●	○		**131**
Threaded rod bracket FSB 45°			○	●	○		**132**
Universal mounting UHRS			–	●	○		**129**
Universal hinge FUH			○	●	○		**130**
Beam clamp TKR			○	●	○		**133**

○ possible ● recommended – not recommendable

Installation grid

Product		Type of pipes			Example of pipes	Page
Type	Image	light pipes	medium heavy pipes	heavy pipes		
Channel FUS		○	●	○	heating pipes, drinking water and service water pipes, gas and compressed air pipes	**143**
Cross connector FVS II		–	●	○	ventilation ducts and ventilation pipes, drinking water and service water pipes, gas and compressed air pipes, process pipes for gases and liquids, cable trays	**142**
Channel nut FCN Clix P		○	●	○	heating pipes, drinking water and service water pipes, gas and compressed air pipes	**147**
Universal hinge FUH		–	●	○		**147**
Hexagonal connector VM		●	●	●		**146**
Turnbuckle SPS, Bolt left-hand/ right-hand BLR		–	●	○	Installation grid	**146**
Channel connector FUF OC		–	●	○		**144**
Beam clamp TKR		●	●	–	ventilation ducts and ventilation pipes, sprinkler pipes, water and waste water treatment	**146**
Channel washer HK 41		○	●	○		**144**
Threaded rod G		●	●	●		**144**
Hexagonal nut MU		●	●	●		**145**
Washer U		●	●	●		**145**
Hexagonal screw SKS		●	●	○		**145**
Channel nut FCN		○	●	○	ventilation pipes, gas and compressed air pipes	**148**
Cover cap FEC		–	–	–		**147**

○ possible ● recommended – not recommendable

Fixpoint and sliding elements

Product		Qualification	Type of pipes			Example of pipes	Page
Type	Image	fire tested	light pipes	medium heavy pipes	heavy pipes		
Sound insulated fix point FSFP			○	●	○	heating pipes, drinking water and service water pipes plumbing, cooling pipes	**152**
Fixpoint clamp FFPS and -saddle FFPK			○	●	●	heating pipes, drinking water and service water pipes plumbing, cooling pipes	**153**
Sliding element GL			○	●	○	heating pipes, drinking water and service water pipes plumbing, cooling pipes	**154**
Sliding saddle SBS		✓	○	●	●	heating pipes, drinking water and service water pipes plumbing, cooling pipes	**155**
Sliding element FSC1			●	○	–	heating pipes, drinking water and service water pipes plumbing, cooling pipes	**156**
Sliding hanger SB		✓	●	○	–	heating pipes, drinking water and service water pipes plumbing, cooling pipes	**157**
Pendulum hanger PDH / PDH K		✓	○	●	○	heating pipes, drinking water and service water pipes plumbing, cooling pipes	**158**

Airduct and metal roof fixings

Product		Qualification			Type of pipes			Example of pipes	Page
Type	Image	fire tested	VdS-approved	FM-approved	light pipes	medium heavy pipes	heavy pipes		
Ventilation duct clamp LGS					●	○	–	ventilation pipes	**162**
Duct hanger L- and Z-type					●	○	–	ventilation pipes	**164**
Spiral duct hanger LRBN / LRB					●	○	–	ventilation ducts	**165**
Rubber inlay EMS					●	○	–	ventilation ducts and ventilation pipes	**168**
Profile hanger TZ / TZH			✓	✓	○	●	–	ventilation ducts and ventilation pipes, sprinkler pipes, water and waste water treatment	**166**
Hole punch LZ, hole stamp LST									**167**

○ possible ● recommended – not recommendable

Accessories

Product		Qualification				Type of pipes			Example of pipes	Page
Type	Image	fire tested	VdS-approved	FM-approved	UL-approved	light pipes	medium heavy pipes	heavy pipes		
Base plate GPL						○	●	–	ventilation ducts and ventilation pipes, sprinkler pipes, water and waste water treatment	**178**
Base plate GPR						●	○	–		**178**
Double connector plate DPP, DPF						●	○	–	heating pipes, water treatment	**183**
Bolt connector SBB						●	○	–		**184**
Clamp hanger TKL			✓	✓	✓	●	●	–	ventilation ducts and ventilation pipes, sprinkler pipes, water and waste water treatment	**172**
Beam Clamp Steel TKLS Steel Bite			✓	✓		●	●	–		**174**
Turnbuckle SPS, Bolt left-hand / right-hand BLR						–	●	○	Installation grid	**184**
Parallel connector PV						●	○	–		**182**
Support hanger AHB						●	●	●		**180**
Multi connector MW						●	–	–		**181**
Threaded rod G / Threaded stud GS						●	●	●		**176**
Hexagonal nut MU						●	●	●		**186**
Washer U						●	●	●		**185**
Reduction pieces						●	●	–		**187**
Hexagonal screw SKS						●	●	○		**185**
Stud screw STST with bit head and Hex shank						●	●	–	heating pipes, water and waste water treatment	**179**
Installation tool for stud screw HED										**184**
Hexagonal connector VM						●	●	●		**186**
Eyebolt AG						●	●	–		**188**
Thread hanger RAH						●	●	–		**187**
Reduction socket RDM and GRD						●	○	–		**188**
Flat eye screw LLS						●	●	–		**188**
Textile web strapping GWB						●	○	–	heating pipes, water and waste water treatment, temporary pipes	**189**
Perforated steel banding LBV / LBK						●	○	–	heating pipes, water and waste water treatment, temporary pipes	**190**
Impact nail ED						●	–	–		**191**

○ possible ● recommended – not recommendable

fischer innovative solutions

Installation system FUS hot-dip galvanised

Product		Qualification	Type of pipes			Example of pipes	Page
Type	Image	fire tested	leichte Leitung	medium heavy pipes	heavy pipes		
Pipe clamp FRS zl			○	●	–	heating pipes, drinking water and service water pipes, gas and compressed air pipes	**196**
Channel FUS hdg.		✓	–	●	○	heating pipes, drinking water and service water pipes, gas and compressed air pipes	**198**
Channel connector FUF OC hdg.			○	●	○	heating pipes, drinking water and service water pipes, gas and compressed air pipes	**203**
Cantilever arm FCA hdg.		✓	–	●	○	process pipes for gases and liquids, cable trays	**204**
Large cantilever arm FCAM hdg.			–	●	●		**207**
Cover cap FEC			–	–	–		**208**
Connector FCN Clix P hdg. / FCN Clix M hdg.		✓	–	●	○		**221**
Channel washer HK 41 hdg.		✓	○	●	○		**223**
Saddle flange SF hdg.		✓	–	●	○		**224**
Mounting bracket UWS hdg.		✓	–	●	○		**225**
Angle bracket WK hdg.			○	●	○	heating pipes, drinking water and service water pipes, gas and compressed air pipes	**226**
Bracket FAF hdg.			○	●	○		**234**
Flanges FUF hdg.			○	●	○	heating pipes, drinking water and service water pipes, gas and compressed air pipes	**235**
Bracket FFF hdg.			○	●	○		**232**
Variable bracket VB hdg.			–	●	○		**228**
Threaded rod bracket FSB 45° hdg.			○	●	○		**229**
Beam clamp TKR hdg.			○	●	○		**230**
Threaded rod G hdg.			●	●	●		**237**
Washer U mz			●	●	●		**237**
Hexagonal nut MU hdg.			●	●	●		**238**
Hexagonal screw SKS hdg.			●	●	○		**238**

○ possible ● recommended – not recommendable

Installation system stainless steel

Product		Qualification	Type of pipes			Example of pipes	Page
Type	Image	fire tested	light pipes	medium heavy pipes	heavy pipes		
Pipe clamp FRS A2/A4			○	●	–	heating pipes, drinking water and service water pipes, medical gas supply	**242**
Channel MS-L A2			●	○	–	heating pipes, drinking water and service water pipes, medical gas supply	**243**
Cantilever arm ALK A2			●	○	–	process pipes for gases and liquids, cable trays	**243**
T-head bolt FHS Clix A2			●	○	–	heating pipes, drinking water and service water pipes, medical gas supply	**243**
Installation angle bracket MW A2			●	○	–	gas and compressed air pipes, process pipes for gases and liquids	**244**
Saddle flange SF A2			●	○	–		**244**
Channel nut HG A2			●	○	–	gas and compressed air pipes, process pipes for gases and liquids	**244**
FUS Channel A2/A4		✓	○	●	○	heating pipes, drinking water and service water pipes, gas and compressed air pipes	**245**
Cantilever arm FCA A4		✓	–	●	○	process pipes for gases and liquids, cable trays	**245**
Saddle flange SF L A4		✓	–	●	○		**246**
Mounting bracket FAF A4			–	●	○		**246**
Beam clamp TKR			–	●	○		**248**
Channel washer HK 41		✓	○	●	○		**248**
Clix channel nut FCN Clix A4	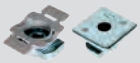	✓	–	●	○	heating pipes, drinking water and service water pipes, gas and compressed air pipes	**249**
Stud screw STS A2/A4			●	●	–	heating pipes, water and waste water treatment	**249**
Threaded rod G A2/A4		✓	●	●	○	ventilation ducts and ventilation pipets	**250**
Threaded stud GS A4		✓	●	●	○	ventilation ducts and ventilation pipets	**250**
Hexagonal connector VM A4			●	●	○		**250**
Washer U A4			●	●	○		**251**
Hexagonal nut MU A4			●	●	○		**251**
Hexagonal screw SKS A4			●	●	○		**251**

○ possible ● recommended – not recommendable

Air conditioner fixings

Product		Applications	Page
Type	Image		
Air conditioner fixing MCE		air conditioner on wall	**254**
Air conditioner fixing KSU		air conditioner on wall	**256**
Sound absorption element PA		air conditioner wall fixed, fans and pumps	**257**

Electrical fixings

Product								Anchoring base		Approval		Application recovmmendation	Page
Type	Image	zinc plated	hdy	A4	C (1.4529)	Principles of function	Type of installation	Concrete	Masonry	ETA	ICC		
ClipFix plus LS/ES/ZS						c)		✓				conduits, flexible pipes	**260**
ClipFix plus SD						c)	2)	✓				trunking, strips, profiles	**262**
Cable clasp KB						c)	2)	✓				conduits	**264**
Cable harness SHA												conduits, flexible and rigid plastic pipes	**266**
Pipe clip RC												rigid plastic pipes	**268**
Pipe clip FC												conduits, flexible and rigid plastic pipes	**270**
Saddle clip SCH												conduits, flexible and rigid plastic pipes	**272**
Nail clip NS / MNS						c)			✓			conduits	**274**
Nail disc NSB						c)			✓			cables in wall slots	**276**
Spacer pipe clamp AM		✓										metal conduits according to DIN 49020	**278**
Conduit clip BSM		✓										conduits, flexible and rigid plastic pipes, metal conduits	**280**
Impact nail ED		✓				c)						conduit clips	**282**
Cable tie BN / UBN												conduits, flexible and rigid plastic pipes	**284**
Wireclip												for suspension of lighting, trunking, busbar	**286**

1) Pre-positioned installation
2) Push-through installation
3) Stand-off installation
a) Adhesive locking
b) Interlocking
c) Friction locking

Sanitary fixings

Product								Anchoring base		Approval		Application recovmmendation	Page
Type	Image	zinc plated	hdy	A4	C (1.4529)	Principles of function	Type of installation	Concrete	Masonry	ETA	ICC		
Sanitary fixings for board materials		✓				b) c)	2)	✓	✓			wash basins and urinals	**290**
Ceramic fixings	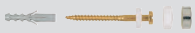	✓				c)	1) 2)	✓	✓			free-standing toilets	**292**
Wash basin and urinal fixings		✓				c)	1) 2)	✓	✓			wash basins and urinals	**294**

1) Pre-positioned installation
2) Push-through installation
3) Stand-off installation
a) Adhesive locking
b) Interlocking
c) Friction locking

fischer
innovative solutions

2a Pipe clamps

	Page
SINGLE SCREW PIPE CLAMPS	
Hinged pipe clamp FGRS Plus	22
Hinged pipe clamp FGRS	24
Hinged pipe clamp FKS Plus for plastic pipes	26
TWO SCREW PIPE CLAMPS	
Pipe clamp FRS Plus	28
Pipe clamp FRS-L Universal	30
Pipe clamp FRS Triple	32
Pipe clamp FRS	34
Silicone pipe clamp FRSH	36
Pipe clamp FRSN Triple	38
Pipe clamp FRSN	40

	Page
HEAVY DUTY PIPE CLAMPS	
Heavy duty pipe clamp FRSM - inch	42
Heavy duty pipe clamp FRSM - metric	44
INSULATED PIPE CLAMPS	
Refrigeration pipe clamp FRS K	46
Refrigeration pipe clamp KFT	48
SPRINKLER CLAMPS	
Sprinkler clamp FRSP	52
Sprinkler clamp FRSL	54
OTHERS	
U-Clamp FUBD	56
U-bolt ETR	51
Hose clamp SGS	58

The one-piece hinged pipe clamp with rapid-locking mechanism

Light, suspended pipelines

Pipelines on cantilevers

APPLICATIONS

- Time-saving fixing for pipes up to Ø2″ using threaded rods or stud screws

ADVANTAGES/BENEFITS

- The rapid-locking mechanism allows a fast and time-saving installation.
- The tight fit of the sound insulation insert prevents it from falling out when inserting the pipe.
- The safety latch fastening guarantees pipe installation without the clamp springing open.
- The combination connecting nut with M8/M10 thread on the FGRS Plus M8/M10 allows optimised mounting choices.
- The screw's combination cross-drive thread allows flexibility during the installation process.
- The compact construction of the pipe clamp enables a simple post-installation insulation.

PROPERTIES

- **Material:** steel DC01 (material no. 1.0330) acc. to DIN EN 10130
- **Zinc plating:** electro zinc-plated, 5 - 9 µm
- **Connecting nut:** resistance welded, SW 13
- **Locking screw:** flat head screw with combination recessed head
- **Material sound insulation insert:** SBR/EPDM; chlorine-free; silicone-free
- **Sound insulation:** for DIN 4109
- **Temperature range:** -40 °C to +100 °C
- **Hardness:** 55 ± 5° Shore A
- **Fire behaviour:** DIN 4102: Class B2

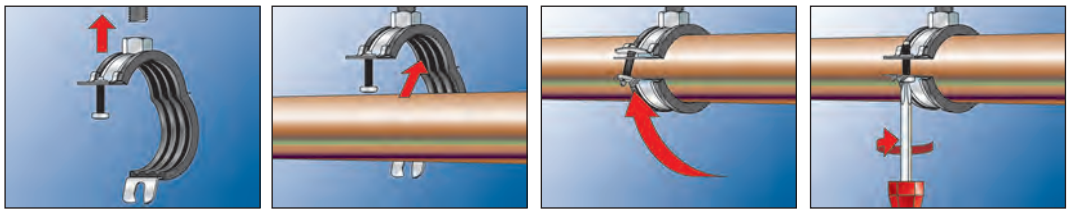

TECHNICAL DATA

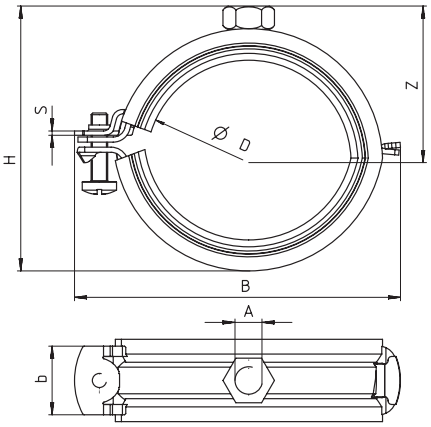

Item	Art.-No.	Thread A	Size [inch]	Clamping range D [mm]	Width B B [mm]	Height H H [mm]	Width x thickness clamp band b x s [mm]	Height Z Z [mm]	Locking screw	Max. recom. static load (centr. tension) $N_{recom.}$ [kN]	Sales unit [pcs]
FGRS Plus 12 - 14	**079400**	M 8	1/4"	12 - 14	48	35	20 x 1.25	21	M 5	0.65	100
FGRS Plus 15 - 19	**079401**	M 8	3/8"	15 - 19	52	40	20 x 1.25	24	M 5	0.65	100
FGRS Plus 20 - 24	**079402**	M 8	1/2"	20 - 24	58	45	20 x 1.25	26	M 5	0.65	100
FGRS Plus 25 - 30	**079403**	M 8	3/4"	25 - 30	63	49	20 x 1.25	28	M 5	0.65	100
FGRS Plus 32 - 37	**079404**	M 8	1"	32 - 37	72	57	20 x 1.25	32	M 5	0.65	100
FGRS Plus 40 - 44	**079405**	M 8	1 1/4"	40 - 44	79	66	20 x 1,5	37	M 5	0.90	50
FGRS Plus 45 - 50	**079406**	M 8	1 1/2"	45 - 50	88	76	20 x 1,5	42	M 5	0.90	50
FGRS Plus 50 - 55	**079407**	M 8	–	50 - 55	94	82	20 x 1,5	45	M 5	0.90	50
FGRS Plus 56 - 63	**079408**	M 8	2"	56 - 63	99	85	20 x 1,5	46	M 5	0.90	50

TECHNICAL DATA

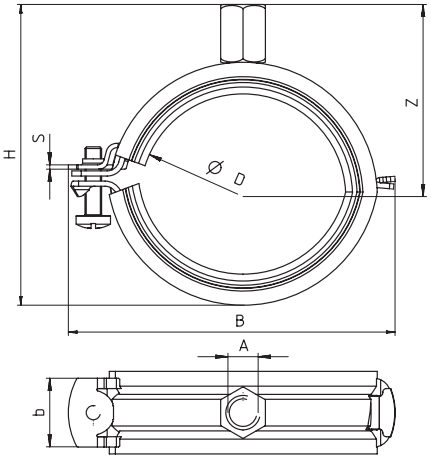

Item	Art.-No.	Thread A	Size [inch]	Clamping range D [mm]	Width B B [mm]	Height H H [mm]	Width x thickness clamp band b x s [mm]	Height Z Z [mm]	Locking screw	Max. recom. static load (centr. tension) $N_{recom.}$ [kN]	Sales unit [pcs]
FGRS Plus 12 - 14 M8/M10	**079430**	M 8 / M 10	1/4"	12 - 14	48	46	20 x 1.25	31	M 5	0.65	100
FGRS Plus 15 - 19 M8/M10	**079431**	M 8 / M 10	3/8"	15 - 19	52	51	20 x 1.25	34	M 5	0.65	100
FGRS Plus 20 - 24 M8/M10	**079432**	M 8 / M 10	1/2"	20 - 24	58	56	20 x 1.25	36	M 5	0.65	100
FGRS Plus 25 - 30 M8/M10	**079433**	M 8 / M 10	3/4"	25 - 30	63	60	20 x 1.25	38	M 5	0.65	100
FGRS Plus 32 - 37 M8/M10	**079434**	M 8 / M 10	1"	32 - 37	72	68	20 x 1.25	42	M 5	0.65	100
FGRS Plus 40 - 44 M8/M10	**079435**	M 8 / M 10	1 1/4"	40 - 44	79	76	20 x 1,5	47	M 5	0.90	50
FGRS Plus 45 - 50 M8/M10	**079436**	M 8 / M 10	1 1/2"	45 - 50	88	86	20 x 1,5	52	M 5	0.90	50
FGRS Plus 50 - 55 M8/M10	**079437**	M 8 / M 10	–	50 - 55	94	92	20 x 1,5	55	M 5	0.90	50
FGRS Plus 56 - 63 M8/M10	**079438**	M 8 / M 10	2"	56 - 63	99	95	20 x 1,5	56	M 5	0.90	50

The one-piece hinged pipe clamp with floating single screw

Fixation with multi-connector

Leightweight installation on cantilever

APPLICATIONS

- For economical fixing of pipes up to Ø2″ with threaded rods or stud screws

ADVANTAGES/BENEFITS

- The floating single screw allows a simple, one-handed installation.
- The safety latch fastening guarantees secure pipe installation without the clamp springing open.
- The compact construction of the pipe clamp enables a simple post-installation insulation.
- The screw's design stops it falling out during the installation.

PROPERTIES

- **Material:** steel DD11 (material no. 1.0332) acc. to DIN EN 10111
- **Zinc plating:** electro zinc-plated, 5 - 9 µm
- **Connecting nut:** resistance welded, M8, SW 13
- **Locking screw:** flat head screw with combination recessed head
- **Material sound insulation insert:** EPDM; chlorine-free; silicone-free
- **Sound insulation:** for DIN 4109
- **Temperature range:** -40 °C to +100 °C
- **Hardness:** 55 ± 5° Shore A
- **Fire behaviour:** DIN 4102: Class B2

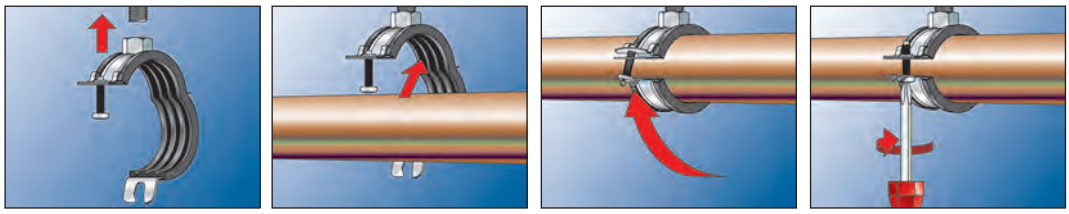

TECHNICAL DATA

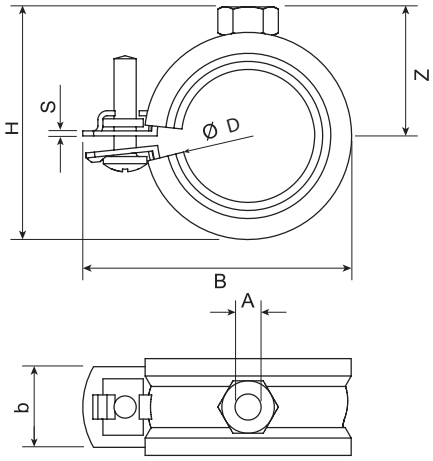

Item	Art.-No.	Thread A	Size [inch]	Clamping range D [mm]	Width B [mm]	Height H [mm]	Width x thickness clamp band b x s [mm]	Height Z [mm]	Locking screw	Max. recom. static load (centr. tension) $N_{recom.}$ [kN]	Sales unit [pcs]
FGRS 8 - 11	**537212**	M 8	–	8 - 11	45	29	20 x 1.25	17	M 5	0.80	100
FGRS 12 - 14	**079420**	M 8	1/4"	12 - 14	48	31	20 x 1.25	21	M 5	0.80	100
FGRS 15 - 19	**079421**	M 8	3/8"	15 - 19	52	36	20 x 1.25	24	M 5	0.80	100
FGRS 20 - 24	**079422**	M 8	1/2"	20 - 24	58	41	20 x 1.25	26	M 5	0.80	100
FGRS 25 - 30	**079423**	M 8	3/4"	25 - 30	63	47	20 x 1.25	28	M 5	0.80	100
FGRS 32 - 37	**079424**	M 8	1"	32 - 37	72	54	20 x 1.25	32	M 5	0.80	100
FGRS 40 - 44	**079425**	M 8	1 1/4"	40 - 44	79	61	20 x 1,5	37	M 5	0.90	50
FGRS 45 - 50	**079426**	M 8	1 1/2"	45 - 50	88	67	20 x 1,5	42	M 5	0.90	50
FGRS 50 - 55	**079427**	M 8	–	50 - 55	94	72	20 x 1,5	45	M 5	0.90	50
FGRS 56 - 63	**079428**	M 8	2"	56 - 63	99	80	20 x 1,5	46	M 5	0.90	50

The one-screw hinged pipe clamp with quick-release fastener for plastic and metal composite pipes

Plastic pipe with fixpoint installation

APPLICATIONS

- Time-saving fixing for plastic and metal composite pipes using threaded rods or stud screws
- Can be used as a slide bracket with spacers or as a fixed point clamp by removing the spacers

ADVANTAGES/BENEFITS

- The quick-release fastener allows a fast and time-saving installation.
- The spacing sleeves on the locking screw stops over tightening of the pipes.
- The tight fit of the sound insulation insert prevents it from falling out when inserting the pipe.
- The latch fastening guarantees pipe installation without the clamp springing open.
- The compact construction of the hinged pipe clamp enables a simple post-installation insulation.
- The screw's design stops it falling out during the installation.

PROPERTIES

- **Material:** steel DD11 (material no. 1.0332) acc. to DIN EN 10111
- **Zinc plating:** electro zinc-plated, 5 - 9 µm
- **Connecting nut:** resistance welded, M8, SW 13
- **Locking screw:** flat head screw with combination recessed head
- **Material sound insulation insert:**: NR/SBR/EPDM; chlorine-free; silicone-free
- **Sound insulation:** for DIN 4109
- **Temperature range:** -40 °C to +110 °C
- **Hardness:** 60 ± 5° Shore A
- **Fire behaviour:** DIN 4102: Class B2

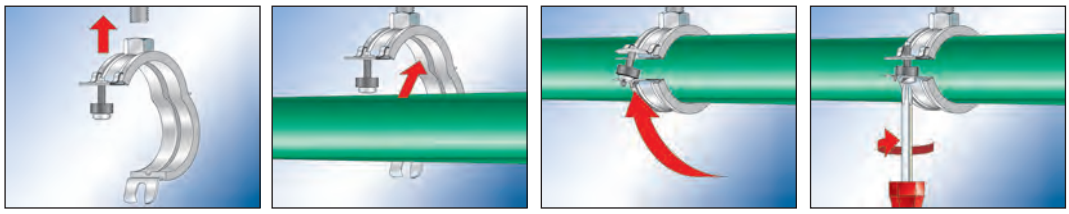

TECHNICAL DATA

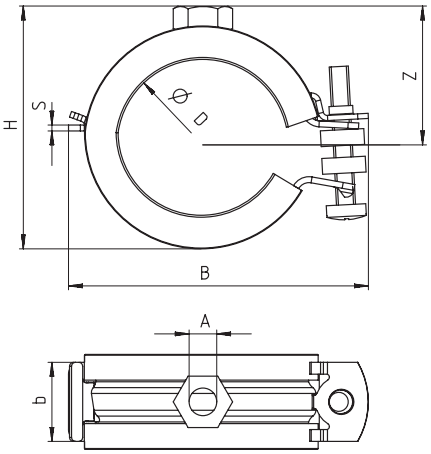

Item	Art.-No.	Thread A	Size [inch]	Clamping range D [mm]	Width B B [mm]	Height H H [mm]	Width x thickness clamp band b x s [mm]	Height Z Z [mm]	Locking screw	Max. recom. static load (centr. tension) $N_{recom.}$ [kN]	Sales unit [pcs]
FKS Plus 15 - 19	**079470**	M 8	3/8"	15 - 19	52	40	20 x 1.25	24	M 5	0.65	100
FKS Plus 20 - 24	**079471**	M 8	1/2"	20 - 24	58	45	20 x 1.25	26	M 5	0.65	100
FKS Plus 25 - 30	**079472**	M 8	3/4"	25 - 30	63	49	20 x 1.25	28	M 5	0.65	100
FKS Plus 32 - 37	**079473**	M 8	1"	32 - 37	72	57	20 x 1.25	32	M 5	0.65	100
FKS Plus 40 - 44	**079474**	M 8	1 1/4"	40 - 44	79	66	20 x 1,5	37	M 5	0.90	50
FKS Plus 45 - 50	**079475**	M 8	1 1/2"	45 - 50	88	76	20 x 1,5	42	M 5	0.90	50
FKS Plus 50 - 55	**079476**	M 8	–	50 - 55	94	82	20 x 1,5	45	M 5	0.90	50
FKS Plus 56 - 63	**079477**	M 8	2"	56 - 63	99	85	20 x 1,5	46	M 5	0.90	50

The two-screw pipe clamp with rapid-locking mechanism

Suspended pipe under angle bracket

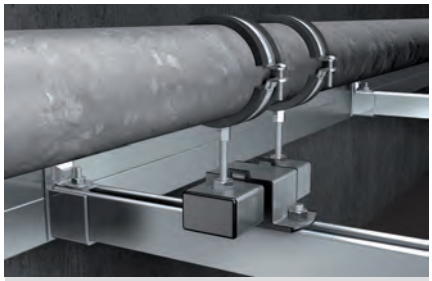

Pipe elongation with sliding element and upright pipe

APPLICATIONS

- For simple and easy fixing of pipes using threaded rods or stud screws

ADVANTAGES/BENEFITS

- The rapid-locking mechanism allows for fast and time-saving installation.
- The safety latch fastening guarantees pipe installation without the clamp springing open.
- The tight fit of the sound insulation insert prevents it from falling out when aligning the pipe.
- The combination connecting nut with M8/M10 thread enables optimised mounting choices.
- The two screws allow an easy adjustment to suit the outer pipe diameter.
- The screw's safety feature ensures trouble-free installation.

CERTIFICATES

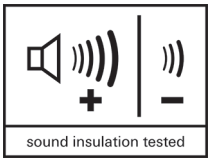

PROPERTIES

- **Material:** steel DC01 (material no. 1.0330) acc. to DIN EN 10130
- **Zinc plating:** electro zinc-plated, 5 - 9 µm
- **Connecting nut:** resistance welded, M8 / M10, SW 13
- **Locking screw:** flat head screw with combination recessed head
- **Material sound insulation insert:** EPDM; chlorine-free; silicone-free
- **Sound insulation:** for DIN 4109
- **Temperature range:** -40 °C to +100 °C
- **Hardness:** 55 ± 5° Shore A
- **Fire behaviour:** DIN 4102: Class B2

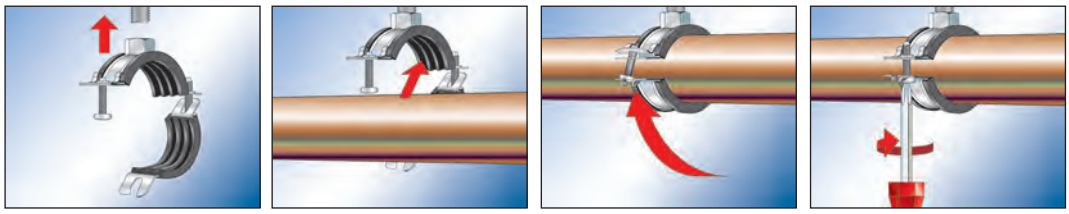

TECHNICAL DATA

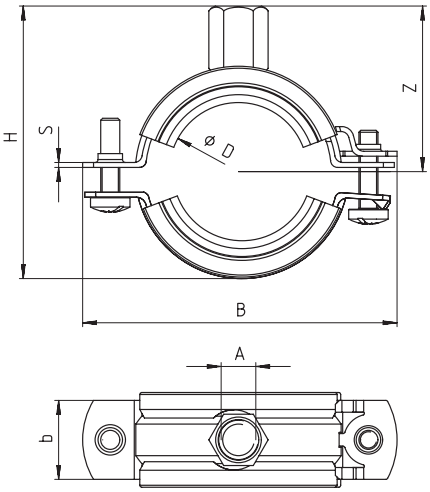

Item	Art.-No.	Thread A	Size [inch]	Clamping range D [mm]	Width B B [mm]	Height H H [mm]	Width x thickness clamp band b x s [mm]	Height Z Z [mm]	Locking screw	Max. recom. static load (centr. tension) $N_{recom.}$ [kN]	Sales unit [pcs]
FRS Plus 12 - 15	**079440**	M 8 / M 10	1/4"	12 - 15	59	41	20 x 1,25	28	M 5	0.80	100
FRS Plus 15 - 19	**079441**	M 8 / M 10	3/8"	15 - 19	63	45	20 x 1,25	30	M 5	0.80	100
FRS Plus 20 - 24	**079442**	M 8 / M 10	1/2"	20 - 24	68	50	20 x 1,25	32	M 5	0.80	100
FRS Plus 25 - 30	**079443**	M 8 / M 10	3/4"	25 - 30	74	56	20 x 1,25	35	M 5	0.80	100
FRS Plus 32 - 37	**079444**	M 8 / M 10	1"	32 - 37	81	63	20 x 1,25	39	M 5	0.80	100
FRS Plus 40 - 45	**079445**	M 8 / M 10	1 1/4"	40 - 45	90	71	20 x 1,5	43	M 5	1.00	50
FRS Plus 48 - 54	**079446**	M 8 / M 10	1 1/2"	48 - 54	98	80	20 x 1,5	48	M 5	1.00	50
FRS Plus 55 - 61	**079447**	M 8 / M 10	2"	55 - 61	100	87	20 x 1,5	51	M 5	1.00	50
FRS Plus 63 - 67	**079449**	M 8 / M 10	–	63 - 67	114	93	20 x 1,5	54	M 5	1.00	25
FRS Plus 68 - 73	**079450**	M 8 / M 10	–	68 - 73	117	100	20 x 2,0	58	M 6	1.80	25
FRS Plus 72 - 80	**079451**	M 8 / M 10	2 1/2"	72 - 80	125	107	20 x 2,0	61	M 6	1.80	25
FRS Plus 80 - 86	**079452**	M 8 / M 10	–	80 - 86	132	113	20 x 2,0	64	M 6	1.80	25
FRS Plus 87 - 92	**079453**	M 8 / M 10	3"	87 - 92	139	119	20 x 2,0	67	M 6	1.80	25
FRS Plus 95 - 103	**079454**	M 8 / M 10	–	95 - 103	151	130	20 x 2,0	73	M 6	1.80	25
FRS Plus 108 - 116	**079455**	M 8 / M 10	4"	108 - 116	163	143	20 x 2,0	79	M 6	1.80	20

Pipe clamp FRS-L Universal

The light two-screw pipe clamp with rapid-locking mechanism and combination connecting nut

Cantilever construction with channel

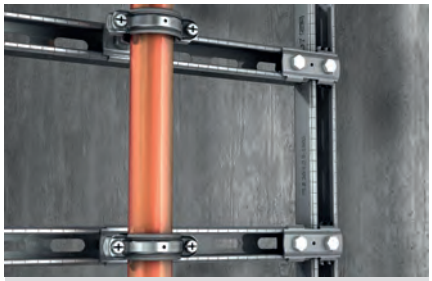

Vertical installation

APPLICATIONS

- For simple and easy fixing for pipes using threaded rods or stud screws

ADVANTAGE/BENEFITS

- The fire inspection report and the sound insulation report guarantee objectively tested functional safety.
- The unique rapid-locking mechanism with crimped edges allows a secure and time-saving installation.
- The clamp band with crimped edges gives a tight fit of the sound insulation insert and prevents it from slipping out when aligning the pipe.
- The two screws allow a perfect adaptation of the pipe clamp to suit every outer pipe diameter.
- The connecting nut with combination thread M8/M10 enables an optimised warehousing.
- The screw's loss protection guarantees an easy installation.

CERTIFICATES

Fire resistance classification R 120 according DIN EN 1363-1

MLAR R 30

sound insulation tested

PROPERTIES

- **Material:** steel DD11 (material no. 1.0332) acc. to DIN EN 10111
- **Zinc plating:** electro zinc-plated, min. 5 µm acc. DIN EN ISO 4042
- **Connecting nut:** resistance welded, M8 / M10, SW 13
- **Locking screw:** flat head screw with combination recessed head
- **Material sound insulation insert:** SBR/EPDM; chlorine-free; silicone-free
- **Sound insulation:** for DIN 4109
- **Temperature range:** -40 °C to +100 °C
- **Hardness:** 55 ± 5° Shore A
- **Fire behaviour:** DIN 4102: Class B2

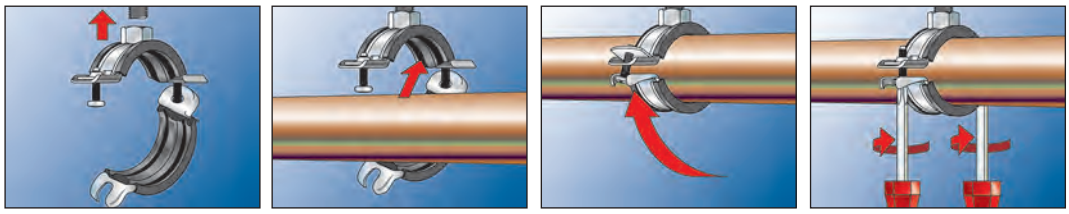

TECHNICAL DATA

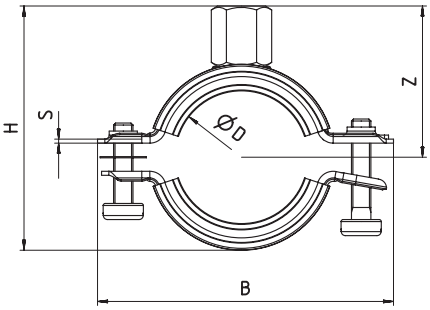

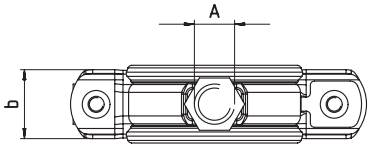

Item	Art.-No.	Fire test report	Thread A	Size [inch]	Clamping range D [mm]	Width B [mm]	Height H [mm]	Width x thickness clamp band b x s [mm]	Height Z [mm]	Locking screw	Max. re-com. static load (centr. tension) $N_{recom.}$ [kN]	Sales unit [pcs]
FRS-L 8 - 11 Universal	**539443**	X	M 8 / M 10	–	8 - 11	47	35	18 x 1,0	25	M 5	0.70	25
FRS-L 12 - 15 Universal	**539444**	X	M 8 / M 10	1/4"	12 - 15	52	39	18 x 1,0	27	M 5	0.70	25
FRS-L 16 - 19 Universal	**539445**	X	M 8 / M 10	3/8"	16 - 19	56	43	18 x 1,0	29	M 5	0.70	25
FRS-L 20 - 24 Universal	**539446**	X	M 8 / M 10	1/2"	20 - 24	61	48	18 x 1,0	31	M 5	0.70	25
FRS-L 25 - 30 Universal	**539447**	X	M 8 / M 10	3/4"	25 - 30	67	53	18 x 1,0	34	M 5	0.70	25
FRS-L 31 - 37 Universal	**539448**	X	M 8 / M 10	1"	31 - 37	74	61	18 x 1,0	38	M 5	0.70	25
FRS-L 38 - 45 Universal	**539449**	X	M 8 / M 10	1 1/4"	38 - 45	83	69	18 x 1,2	42	M 5	1.00	25
FRS-L 46 - 52 Universal	**539450**	X	M 8 / M 10	1 1/2"	46 - 52	90	76	18 x 1,2	45	M 5	1.00	25
FRS-L 53 - 59 Universal	**539451**	X	M 8 / M 10	–	53 - 59	97	83	18 x 1,2	49	M 5	1.00	25
FRS-L 60 - 66 Universal	**539452**	X	M 8 / M 10	2"	60 - 66	104	90	18 x 1,2	52	M 5	1.00	10
FRS-L 67 - 75 Universal	**539453**	X	M 8 / M 10	–	67 - 75	120	100	20 x 1,8	57	M 6	1.30	10
FRS-L 76 - 84 Universal	**539454**	X	M 8 / M 10	2 1/2"	76 - 84	130	109	20 x 1,8	62	M 6	1.30	10
FRS-L 85 - 93 Universal	**539455**	X	M 8 / M 10	3"	85 - 93	139	118	20 x 1,8	66	M 6	1.30	10
FRS-L 94 - 100 Universal	**539456**	X	M 8 / M 10	–	94 - 100	146	125	20 x 1,8	70	M 6	1.30	10
FRS-L 101 - 110 Universal	**539457**	X	M 8 / M 10	–	101 - 110	156	135	20 x 1,8	75	M 6	1.30	10
FRS-L 111 - 119 Universal	**539459**	X	M 8 / M 10	4"	111 - 119	165	144	20 x 1,8	79	M 6	1.30	10
FRS-L 120 - 129 Universal	**544905**	X	M 8 / M 10	–	120 - 129	176	156	25 x 2,0	86	M 6	1.50	5
FRS-L 130 - 137 Universal	**544906**	X	M 8 / M 10	–	130 - 137	184	164	25 x 2,0	90	M 6	1.50	5
FRS-L 138 - 145 Universal	**544907**	X	M 8 / M 10	5"	138 - 145	192	172	25 x 2,0	94	M 6	1.50	5
FRS-L 146 - 155 Universal	**544908**	X	M 8 / M 10	–	146 - 155	202	182	25 x 2,0	99	M 6	1.50	5
FRS-L 156 - 163 Universal	**544909**	X	M 8 / M 10	–	156 - 163	211	190	25 x 2,0	103	M 6	1.50	5
FRS-L 164 - 172 Universal	**544910**	X	M 8 / M 10	6"	164 - 172	219	199	25 x 2,0	106	M 6	1.50	5

The two-screw pipe clamp with rapid-locking mechanism and triple connecting nut

Height adjustable pipe installation

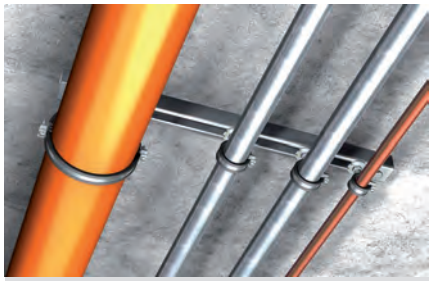

Drainage pipe assembly

APPLICATIONS

- For simple and easy fixing of pipelines with threaded rods or hanger bolts

ADVANTAGES/BENEFITS

- The connecting nut with combination thread M8 / M10 / 1/2" allows for optimised mounting positioning.
- The rapid-locking mechanism allows for fast and time-saving installation.
- The tight fit of the sound insulation insert prevents it from falling out when aligning the pipe.
- The two screws allow for ideal adaptation to suit the outer pipe diameter.

PROPERTIES

- **Material:** steel DD11 (material no. 1.0332) acc. to DIN EN 10111
- **Zinc plating:** electro zinc-plated, min. 5 µm
- **Connecting nut:** resistance welded, M8 / M10 / 1/2"
- **Locking screw:** flat head screw with combination recessed head
- **Material sound insulation insert:** SBR/EPDM; chlorine-free; silicone-free
- **Sound insulation:** for DIN 4109
- **Temperature range:** -50 °C to +110 °C
- **Hardness:** 45 ± 5° Shore A
- **Fire behaviour:** DIN 4102: Class B2

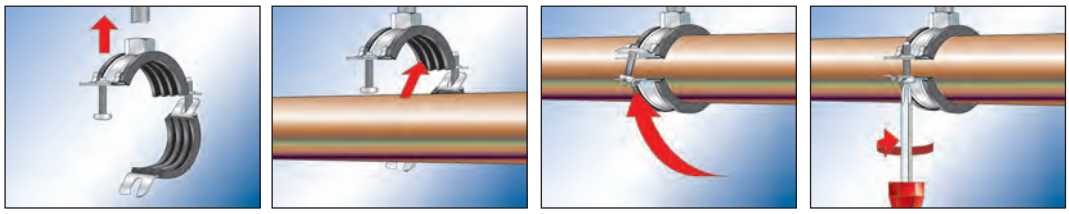

TECHNICAL DATA

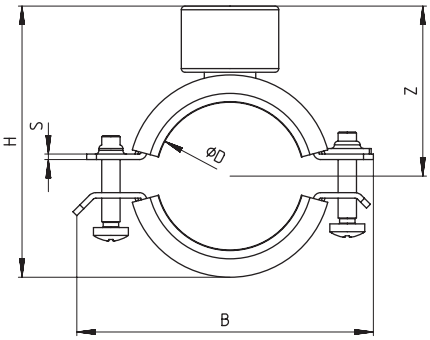

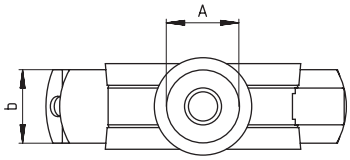

Item	Art.-No.	Thread A	Size [inch]	Clamping range D [mm]	Width B B [mm]	Height H H [mm]	Width x thickness clamp band b x s [mm]	Height Z Z [mm]	Locking screw	Max. recom. static load (centr. tension) $N_{recom.}$ [kN]	Sales unit [pcs]
FRS Triple 15 - 19	**500698**	M 8 / M 10 / 1/2"	3/8"	15 - 19	61	53	20 x 1,5	36	M 5	1.00	100
FRS Triple 21 - 23	**500699**	M 8 / M 10 / 1/2"	1/2"	21 - 23	65	57	20 x 1,5	38	M 5	1.00	100
FRS Triple 26 - 28	**500700**	M 8 / M 10 / 1/2"	3/4"	26 - 28	70	62	20 x 1,5	40	M 5	1.00	100
FRS Triple 32 - 35	**500701**	M 8 / M 10 / 1/2"	1"	32 - 35	77	69	20 x 1,5	44	M 5	1.00	100
FRS Triple 40 - 43	**500702**	M 8 / M 10 / 1/2"	1 1/4"	40 - 43	85	77	20 x 1,5	48	M 5	1.00	50
FRS Triple 48 - 56	**500703**	M 8 / M 10 / 1/2"	1 1/2"	48 - 56	98	90	20 x 1,5	54	M 5	1.00	50
FRS Triple 57 - 62	**500704**	M 8 / M 10 / 1/2"	2"	57 - 63	104	96	20 x 1,5	57	M 5	1.00	50
FRS Triple 63 - 70	**500705**	M 8 / M 10 / 1/2"	–	63 - 70	112	104	20 x 1,5	61	M 5	1.00	25
FRS Triple 74 - 80	**500706**	M 8 / M 10 / 1/2"	2 1/2"	74 - 80	122	114	20 x 1,5	66	M 5	1.00	25
FRS Triple 83 - 91	**500707**	M 8 / M 10 / 1/2"	3"	83 - 91	133	125	20 x 1,5	72	M 5	1.00	25
FRS Triple 100 - 105	**500708**	M 8 / M 10 / 1/2"	–	100 - 105	155	139	23 x 2,0	79	M 6	1.50	10
FRS Triple 108 - 114	**500709**	M 8 / M 10 / 1/2"	4"	108 - 114	164	148	23 x 2,0	83	M 6	1.50	10
FRS Triple 115 - 125	**500710**	M 8 / M 10 / 1/2"	–	115 - 125	175	159	23 x 2,0	89	M 6	1.50	10
FRS Triple 127 - 135	**500711**	M 8 / M 10 / 1/2"	–	127 - 135	185	169	23 x 2,0	94	M 6	1.50	10
FRS Triple 135 - 140	**500712**	M 8 / M 10 / 1/2"	5"	135 - 140	190	174	23 x 2,0	96	M 6	1.50	10
FRS Triple 159 - 169	**500713**	M 8 / M 10 / 1/2"	6"	159 - 169	219	203	23 x 2,0	111	M 6	1.50	10

The two-screw pipe clamp with combination connecting thread

Height adjustable pipe installation

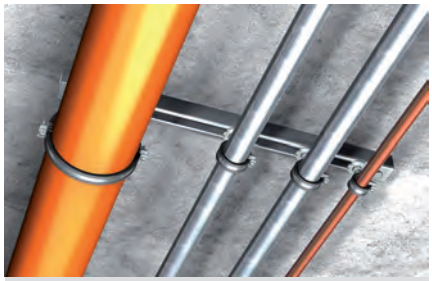

Drainage pipe assembly

APPLICATIONS

- Secure fixing for pipes with threaded rods or stud screws (also when there are fire protection requirements)

ADVANTAGES/BENEFITS

- The fire test report guarantees independently tested functional safety.
- The two screws allow an easy adjustment to suit the outer pipe diameter.
- The combination connecting nut with thread M8/M10 enables optimised mounting choices.
- The sound insulation insert offers noise protection and prevents contact corrosion.
- The screw's safety feature ensures trouble-free installation.

CERTIFICATES

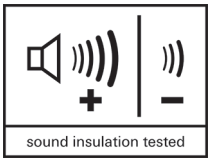

PROPERTIES

- **Material:** steel DC01 (material no. 1.0330) acc. to DIN EN 10130
- **Zinc plating:** electro zinc-plated, 5 - 9 µm
- **Connecting nut:** resistance welded, M8 / M10, SW 13
- **Locking screw:** flat head screw with combination recessed head
- **Material sound insulation insert:** EPDM; chlorine-free; silicone-free
- **Sound insulation:** for DIN 4109
- **Temperature range:** -40 °C to +100 °C
- **Hardness:** 55 ± 5° Shore A
- **Fire behaviour:** DIN 4102: Class B2

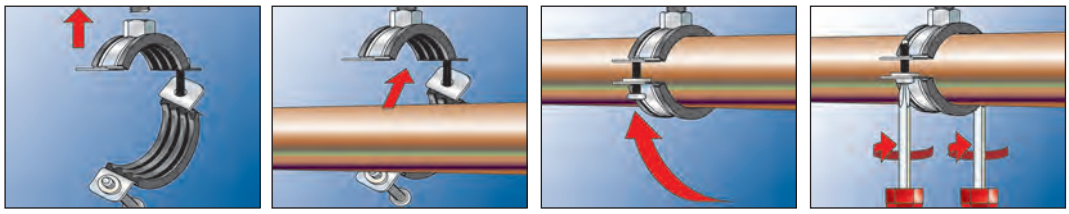

TECHNICAL DATA

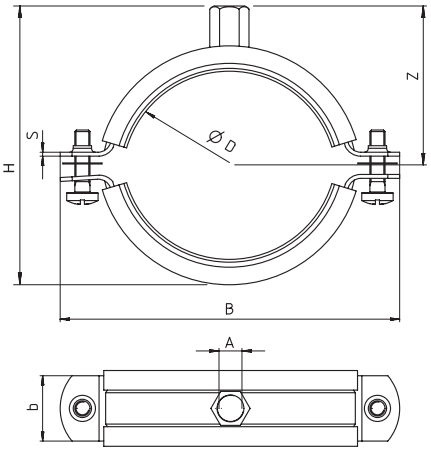

Item	Art.-No.	Fire test report	Thread A	Size [inch]	Clamping range D [mm]	Width B B [mm]	Height H H [mm]	Width x thickness clamp band b x s [mm]	Height Z Z [mm]	Locking screw	Max. re-com. static load (centr. tension) $N_{recom.}$ [kN]	Sales unit [pcs]
FRS 12 - 15 M8/M10	**510969**	X	M 8 / M 10	1/4"	12 - 15	55	39	20 x 1.25	31	M 6	1.00	100
FRS 15 - 19 M8/M10	**042535**	X	M 8 / M 10	3/8"	15 - 19	59	43	20 x 1.25	29	M 6	1.00	100
FRS 20 - 24 M8/M10	**042536**	X	M 8 / M 10	1/2"	20 - 24	65	48	20 x 1.25	32	M 6	1.00	100
FRS 25 - 30 M8/M10	**042537**	X	M 8 / M 10	3/4"	25 - 30	72	54	20 x 1.25	35	M 6	1.00	100
FRS 32 - 37 M8/M10	**042538**	X	M 8 / M 10	1"	32 - 37	77	61	20 x 1.25	38	M 6	1.00	100
FRS 40 - 45 M8/M10	**042554**	X	M 8 / M 10	1 1/4"	40 - 45	89	69	20 x 1.25	42	M 6	1.00	50
FRS 48 - 54 M8/M10	**510970**	X	M 8 / M 10	1 1/2"	48 - 54	99	78	20 x 1.25	46	M 6	1.00	50
FRS 55 - 61 M8/M10	**042555**	X	M 8 / M 10	2"	55 - 61	105	85	20 x 1.25	50	M 6	1.00	50
FRS 63 - 67 M8/M10	**091488**	X	M 8 / M 10	–	63 - 67	111	91	20 x 1.25	53	M 6	1.00	50
FRS 72 - 80 M8/M10	**091489**	X	M 8 / M 10	2 1/2"	72 - 80	125	104	20 x 2.0	60	M 6	1.50	25
FRS 87 - 92 M8/M10	**091505**	X	M 8 / M 10	3"	87 - 92	137	116	20 x 2.0	66	M 6	1.50	25
FRS 95 - 103 M8/M10	**545649**	X	M 8 / M 10	–	95 - 103	149	130	25 x 2,0	73	M 6	2.00	25
FRS 108 - 116 M8/M10	**091506**	X	M 8 / M 10	4"	108 - 116	164	140	25 x 2,0	78	M 6	2.0	20
FRS 121 - 128 M8/M10	**079456**	X	M 8 / M 10	–	121 - 128	176	152	25 x 2.5	84	M 6	2.50	10
FRS 133 - 141 M8/M10	**079457**	X	M 8 / M 10	5"	133 - 141	187	165	25 x 2.5	90	M 6	2.50	10
FRS 159 - 165 M8/M10	**079458**	X	M 8 / M 10	–	159 - 165	211	198	25 x 2.5	102	M 6	2.50	8
FRS 165 - 168 M8/M10	**079459**	X	M 8 / M 10	6"	165 - 168	225	192	25 x 2.5	104	M 6	2.50	8

Silicone pipe clamp FRSH

The two-screw pipe clamp with a sound insulation insert with resistance to high temperatures

Silicone pipe clamp on sliding element

APPLICATIONS

- Fixing of high-temperature pipelines with threaded rods or stud screws (e.g. steam pipes)

ADVANTAGES/BENEFITS

- The special silicone sound insulation insert allows a use with average temperatures of up to +220 °C.
- The two screws enable an easy adjustment to suit the outer pipe diameter.
- The screw's safety feature ensures trouble-free installation.

PROPERTIES

- **Material:** steel DD11 (material no. 1.0332) acc. to DIN EN 10111
- **Zinc plating:** electro zinc-plated, 5 - 9 µm
- **Connecting nut:** (up to FRSH 59 - 63) resistance welded, M8 and M8 / M10 SW 13, M10 SW 17
- **Locking screw:** flat head screw with combination recessed head
- **Material sound insulation insert:** silicone
- **Sound insulation:** for DIN 4109
- **Temperature range:** -40 °C to +220 °C
- **Hardness:** 60 ± 5° Shore A
- **Fire behaviour:** DIN 4102: Class B2

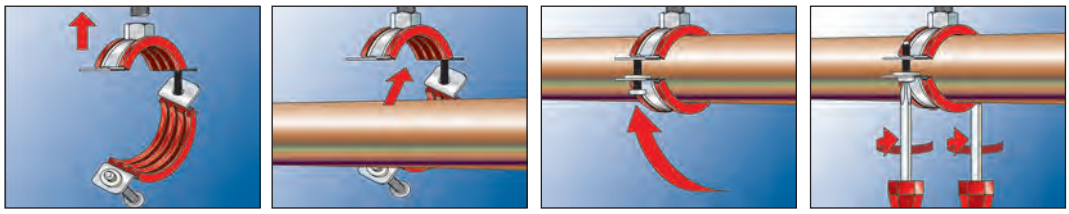

TECHNICAL DATA

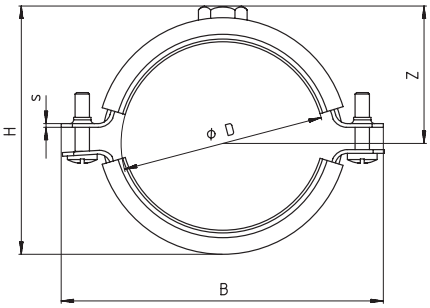

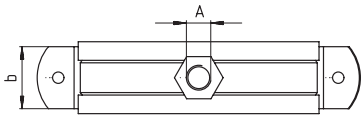

Item	Art.-No.	Thread A	Size [inch]	Clamping range D [mm]	Width B B [mm]	Height H H [mm]	Width x thickness clamp band b x s [mm]	Height Z Z [mm]	Locking screw	Max. recom. static load (centr. tension) $N_{recom.}$ [kN]	Sales unit [pcs]
FRSH 15 - 19	**063490**	M 8	3/8"	15 - 19	62	41	20 x 1.25	24	M 5	1.00	100
FRSH 20 - 24	**063492**	M 8	1/2"	20 - 24	68	46	20 x 1.25	26	M 5	1.00	100
FRSH 25 - 30	**063494**	M 8	3/4"	25 - 30	75	52	20 x 1.25	29	M 5	1.00	100
FRSH 32 - 37	**063495**	M 8	1"	32 - 37	80	59	20 x 1.25	33	M 5	1.00	100
FRSH 40 - 45	**063498**	M 8	1 1/4"	40 - 45	90	67	20 x 1.25	37	M 5	1.00	50
FRSH 48 - 53	**063499**	M 8	1 1/2"	48 - 53	97	75	20 x 1.25	41	M 5	1.00	50
FRSH 54 - 59	**063500**	M 8	–	54 - 59	104	81	20 x 1.25	44	M 5	1.00	50
FRSH 60 - 64	**063502**	M 8	2"	60 - 64	110	86	20 x 1.25	46	M 5	1.00	50
FRSH 68 - 73	**063504**	M 10	–	68 - 73	122	95	25 x 1,5	51	M 6	1.30	25
FRSH 72 - 78	**063505**	M 10	2 1/2"	72 - 78	130	100	25 x 1,5	55	M 6	1.30	25
FRSH 80 - 86	**063511**	M 10	–	80 - 86	130	108	25 x 1,5	58	M 6	1.30	25
FRSH 87 - 92	**063513**	M 10	3"	87 - 92	141	114	25 x 1,5	61	M 6	1.30	25
FRSH 95 - 103	**063518**	M 10	–	95 - 103	156	125	25 x 1,5	67	M 6	1.30	25
FRSH 102 - 116	**063520**	M 10	4"	102 - 116	172	140	25 x 2,0	74	M 6	2.00	20
FRSH 133 - 141	**063537**	M 8 / M 10	5"	133 - 141	198	174	25 x 2.5	95	M 8	2.00	10
FRSH 159 - 168	**091507**	M 8 / M 10	–	159 - 168	226	201	25 x 2.5	109	M 8	2.00	8

The two-screw pipe clamp with rapid-locking mechanism and triple connecting nut

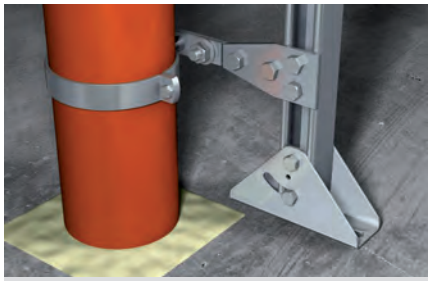

Waste water pipe

APPLICATIONS

- For simple and easy fixing of pipelines with threaded rods or hanger bolts

ADVANTAGES/BENEFITS

- The connecting nut with combination thread M8 / M10 / 1/2" allows for optimised mounting positioning.
- The rapid-locking mechanism allows for fast and time-saving installation.
- The two screws allow for ideal adaptation to suit the outer pipe diameter.

PROPERTIES

- **Material:** steel DD11 (material no. 1.0332) acc. to DIN EN 10111
- **Zinc plating:** electro zinc-plated, min. 5 µm
- **Connecting nut:** resistance welded, M8 / M10 / 1/2"
- **Locking screw:** flat head screw with combination recessed head

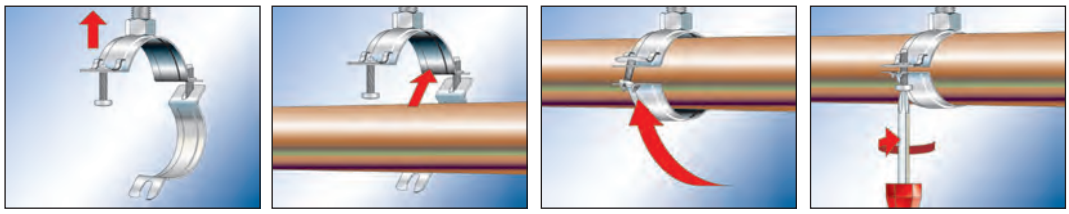

TECHNICAL DATA

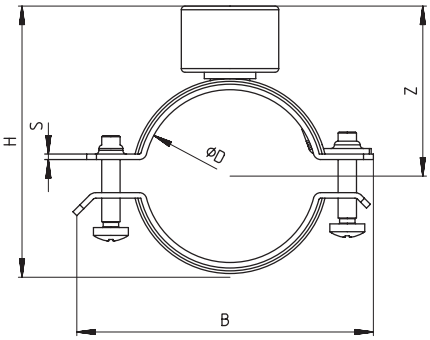

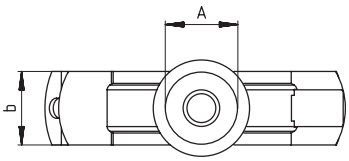

Item	Art.-No.	Thread A	Size [inch]	Clamping range D [mm]	Width B B [mm]	Height H H [mm]	Width x thickness clamp band b x s [mm]	Height Z Z [mm]	Locking screw	Max. recom. static load (centr. tension) $N_{recom.}$ [kN]	Sales unit [pcs]
FRSN Triple 15 - 19	**500714**	M 8 / M 10 / 1/2"	3/8"	15 - 19	54	44	20 x 1,5	32	M 5	1.00	100
FRSN Triple 21 - 23	**500715**	M 8 / M 10 / 1/2"	1/2"	21 - 23	58	48	20 x 1,5	34	M 5	1.00	100
FRSN Triple 26 - 28	**500716**	M 8 / M 10 / 1/2"	3/4"	26 - 28	63	53	20 x 1,5	36	M 5	1.00	100
FRSN Triple 32 - 35	**500717**	M 8 / M 10 / 1/2"	1"	32 - 35	70	60	20 x 1,5	40	M 5	1.00	100
FRSN Triple 40 - 43	**500718**	M 8 / M 10 / 1/2"	1 1/4"	40 - 43	78	68	20 x 1,5	44	M 5	1.00	50
FRSN Triple 48 - 56	**500719**	M 8 / M 10 / 1/2"	1 1/2"	48 - 56	91	81	20 x 1,5	50	M 5	1.00	50
FRSN Triple 57 - 62	**500720**	M 8 / M 10 / 1/2"	2"	57 - 63	97	87	20 x 1,5	53	M 5	1.00	50
FRSN Triple 63 - 70	**500721**	M 8 / M 10 / 1/2"	–	63 - 70	105	95	20 x 1,5	57	M 5	1.00	50
FRSN Triple 74 - 80	**500722**	M 8 / M 10 / 1/2"	2 1/2"	74 - 80	115	105	20 x 1,5	62	M 5	1.00	25
FRSN Triple 83 - 91	**500723**	M 8 / M 10 / 1/2"	3"	83 - 91	126	116	20 x 1,5	68	M 5	1.00	25
FRSN Triple 100 - 105	**500724**	M 8 / M 10 / 1/2"	–	100 - 105	148	130	23 x 2,0	74	M 6	1.50	10
FRSN Triple 108 - 114	**500725**	M 8 / M 10 / 1/2"	4"	108 - 114	157	139	23 x 2,0	78	M 6	1.50	10

The two-screw pipe clamp without sound insulation insert

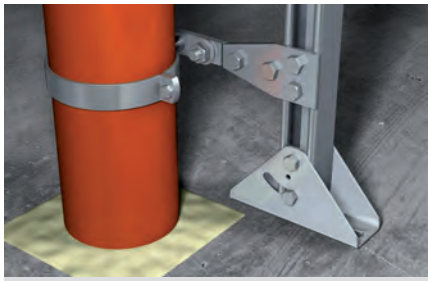

Waste water pipe

APPLICATIONS

- Fixing of metal or plastic pipes without sound insulation requirements with threaded rods or stud screws (e.g. in industrial constructions)

ADVANTAGES/BENEFITS

- The FRSN without the sound insulation insert is ideal for use in industrial applications and plastic pipes.
- The combination connecting nut with thread M8/M10 allows for optimised mounting choices.
- The two screws enable ideal adaptation to suit the outer pipe diameter.
- The screw's safety feature ensures trouble-free installation.

PROPERTIES

- **Material:** steel DD11 (material no. 1.0332) acc. to DIN EN 10111
- **Zinc plating:** electro zinc-plated, 5 - 9 µm
- **Connecting nut:** resistance welded M8 / M10, SW 13, M10 / M12, SW 17
- **Locking screw:** flat head screw with combination recessed head

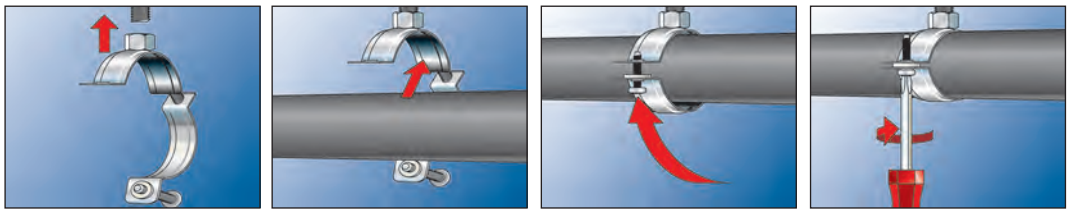

TECHNICAL DATA

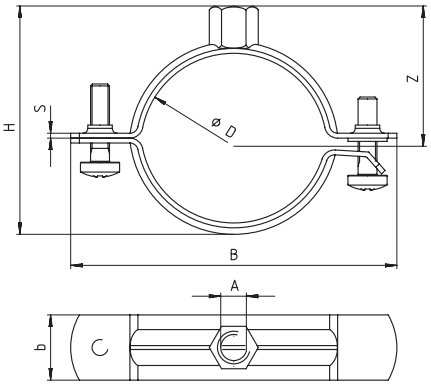

Item	Art.-No.	Thread A	Size [inch]	Clamping range D [mm]	Width B B [mm]	Height H H [mm]	Width x thickness clamp band b x s [mm]	Height Z Z [mm]	Locking screw	Max. recom. static load (centr. tension) $N_{recom.}$ [kN]	Sales unit [pcs]
FRSN 15 - 19 M8/M10	**049459**	M 8 / M 10	3/8"	15 - 19	56	37	20 x 1,5	27	M 6	1.50	100
FRSN 21 - 23 M8/M10	**049789**	M 8 / M 10	1/2"	21 - 23	60	41	20 x 1,5	28	M 6	1.50	100
FRSN 25 - 28 M8/M10	**049790**	M 8 / M 10	3/4"	25 - 28	67	46	20 x 1,5	30	M 6	1.50	100
FRSN 32 - 36 M8/M10	**049793**	M 8 / M 10	1"	32 - 36	74	54	20 x 1,5	34	M 6	1.50	100
FRSN 38 - 43 M8/M10	**049794**	M 8 / M 10	1 1/4"	38 - 43	78	61	20 x 1,5	38	M 6	1.50	50
FRSN 44 - 49 M8/M10	**049902**	M 8 / M 10	1 1/2"	44 - 49	88	67	20 x 1,5	41	M 6	1.50	50
FRSN 50 - 56 M8/M10	**049922**	M 8 / M 10	–	50 - 56	92	74	20 x 1,5	43	M 6 x 16	1.50	50
FRSN 57 - 61 M8/M10	**049944**	M 8 / M 10	2"	57 - 61	98	79	20 x 1,5	47	M 6	1.50	50
FRSN 63 - 70 M8/M10	**049945**	M 8 / M 10	–	63 - 70	105	88	20 x 1,5	54	M 6	1.50	50
FRSN 70 - 77 M8/M10	**049947**	M 8 / M 10	2 1/2"	70 - 77	112	95	20 x 1,5	55	M 6	1.50	25
FRSN 80 - 83 M8/M10	**049948**	M 8 / M 10	–	80 - 83	116	101	20 x 1,5	58	M 6	1.50	25
FRSN 83 - 91 M8/M10	**049979**	M 8 / M 10	3"	83 - 91	128	111	20 x 2.0	63	M 6	2.50	25
FRSN 100 - 106 M8/M10	**050006**	M 8 / M 10	–	100 - 106	143	126	20 x 2.0	70	M 6	2.50	25
FRSN 108 - 114 M8/M10	**050008**	M 8 / M 10	4"	108 - 114	156	134	20 x 2.0	75	M 6	2.50	25
FRSN 118 - 122 M8/M10	**500744**	M 8 / M 10	–	118 - 122	160	142	20 x 2.0	78	M 6	2.50	25
FRSN 123 - 128 M8/M10	**050009**	M 8 / M 10	–	123 - 128	173	149	25 x 2.5	82	M 6	2.50	25
FRSN 131 - 136 M8/M10	**050010**	M 8 / M 10	–	131 - 136	176	157	25 x 2.5	86	M 6	2.50	25
FRSN 137 - 146 M8/M10	**050023**	M 8 / M 10	5"	137 - 146	180	167	25 x 2.5	91	M 6	2.50	25
FRSN 146 - 156 M8/M10	**500746**	M 8 / M 10	–	146 - 156	195	177	25 x 2.5	96	M 6	2.50	25
FRSN 159 - 165 M10/M12	**500747**	M 10 / M 12	–	159 - 165	203	191	25 x 2.5	106	M 6	2.50	25
FRSN 166 - 175 M10/M12	**500748** 1)	M 10 / M 12	–	166 - 175	211	201	25 x 2.5	110	M 8	2.50	20
FRSN 200 - 206 M10/M12	**500751** 1)	M 10 / M 12	–	200 - 206	248	232	25 x 2.5	126	M 8	2.50	10
FRSN 210 - 219 M10/M12	**500752** 1)	M 10 / M 12	8"	210 - 219	261	245	25 x 2.5	133	M 8	2.50	10

1) From diameter 166 mm the steel band is punched and delivered with separate locking screw and nut.

The large pipe clamp with sound insulation insert for medium to heavy loads

Upright pipe on cantilever arm

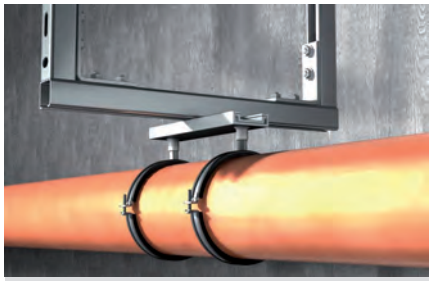

Pipe elongation with sliding element and suspended pipe

APPLICATIONS

- Fixing of medium to heavy pipes with threaded rods (hanger bolts)

ADVANTAGES/BENEFITS

- The inch threaded connecting nut allows for a pipe fixing with increased bending stress.
- High tested loads ensures the secure functioning of the FRSM.
- The sound insulation insert offers noise protection and prevents contact corrosion.
- The two screws allow an easy adjustment to suit the outer pipe diameter.
- The screw's safety feature ensures trouble-free installation.

PROPERTIES

- **Material:** steel DD11 (material no. 1.0332) acc. to DIN EN 10111
- **Zinc plating:** electro zinc-plated, 5 - 9 µm
- **Connecting nut:** 1/2" resistance welded
- **Locking screw:** flat head screw with combination recessed head
- **Material sound insulation insert:** EPDM; chlorine-free; silicone-free
- **Temperature range:** -50 °C to +110 °C
- **Hardness:** 45 ± 5° Shore A
- **Fire behaviour:** DIN 4102: Class B2

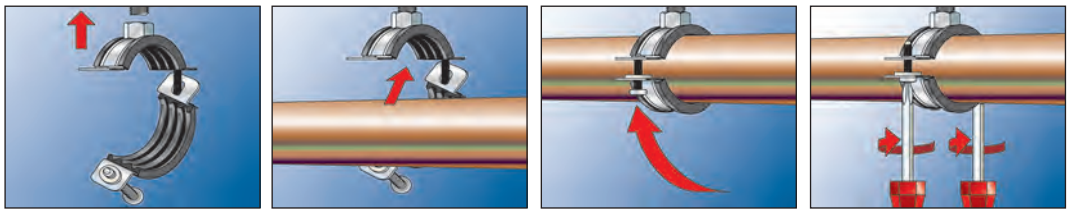

TECHNICAL DATA

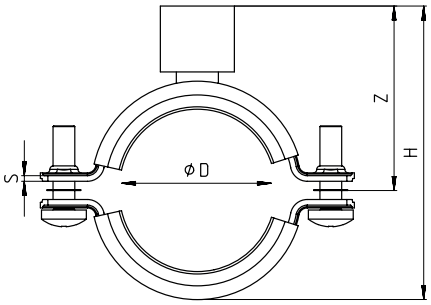

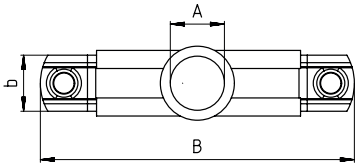

Item	Art.-No.	Thread A	Size [inch]	Clamping range D [mm]	Width B B [mm]	Height H H [mm]	Width x thickness clamp band b x s [mm]	Height Z Z [mm]	Locking screw	Max. recom. static load (centr. tension) $N_{recom.}$ [kN]	Sales unit [pcs]
FRSM 3/8"	**535494**	1/2"	3/8"	14 - 20	64.3	64	20 x 2.0	44.5	M 6	1.50	25
FRSM 1/2"	**535497**	1/2"	1/2"	21 - 26	70.6	70	20 x 2.0	47.5	M 6	1.50	25
FRSM 3/4"	**535498**	1/2"	3/4"	26 - 30	74.8	74	20 x 2.0	49.5	M 6	1.50	25
FRSM 1"	**535499**	1/2"	1"	31 - 38	81	80	20 x 2.0	52.5	M 6	1.50	25
FRSM 1 1/4"	**535500**	1/2"	1 1/4"	40 - 47	91.2	90	20 x 2.0	57.5	M 6	1.50	25
FRSM 1 1/2"	**535501**	1/2"	1 1/2"	48 - 54	100	98	20 x 2.0	61.5	M 6	1.50	25
FRSM 2"	**535502**	1/2"	2"	60 - 66	111.1	109	20 x 2.0	67	M 6	1.50	25
FRSM 2 1/2"	**535503**	1/2"	2 1/2"	73 - 80	131.4	123	25 x 2.5	74	M 8	3.15	10
FRSM 3"	**535504**	1/2"	3"	87 - 94	145.5	137	25 x 2.5	81	M 8	3.15	10
FRSM 110 mm	**535505**	1/2"	–	105 - 112	165.6	157	25 x 2.5	91	M 8	3.15	10
FRSM 4"	**535506**	1/2"	4"	112 - 118	171.7	163	25 x 2.5	94	M 8	3.15	10
FRSM 133 mm	**535507**	1/2"	–	132 - 137	190.8	182	25 x 2.5	103.5	M 8	3.15	10
FRSM 5"	**535508**	1/2"	5"	137 - 142	195.8	187	25 x 2.5	106	M 8	3.15	10
FRSM 160 mm	**535509**	1/2"	–	159 - 164	217.9	209	25 x 2.5	117	M 8	3.15	8
FRSM 6"	**535511**	1/2"	6"	164 - 169	222.9	214	25 x 2.5	119.5	M 8	3.15	8

The large pipe clamp with sound insulation insert for medium to heavy loads

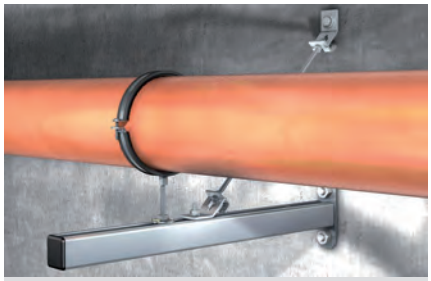

Heavy pipe on cantilever

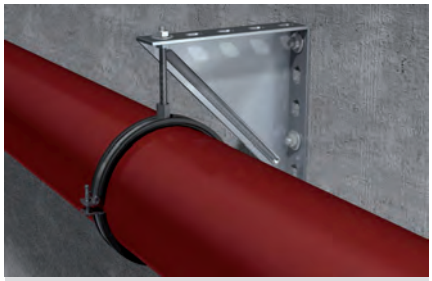

Heavy drainage pipe under angle bracket

APPLICATIONS

- Fixing of medium to heavy pipes with threaded rods (hanger bolts)

ADVANTAGES/BENEFITS

- High tested loads guarantee save functioning of the FRSM.
- The combination connecting nut with thread M10/M12, M12/M16 or M16 allows for optimised mounting choices.
- From Ø 124 mm it is possible to install with 2 threaded rods, e.g. for the fixing of cast iron roof drainage pipes.
- The two screws allow for easy adjustment to suit the outer pipe diameter.
- The screw's safety features ensures trouble-free installation.

PROPERTIES

- **Material:** steel DD11 (material no. 1.0332) acc. to DIN EN 10111
- **Zinc plating:** electro zinc-plated, 5 - 9 µm
- **Connecting nut:** M10 / M12 = SW 17, M12 / M16 = SW 22, M16 = SW 24
- **Locking screw:** flat head screw with combination recessed head to 4", from 4" hexagon screw with nut
- **Material sound insulation insert:** EPDM; chlorine-free; silicone-free
- **Temperature range:** -50 °C to +110 °C
- **Hardness:** 45 ± 5° Shore A
- **Fire behaviour:** DIN 4102: Class B2

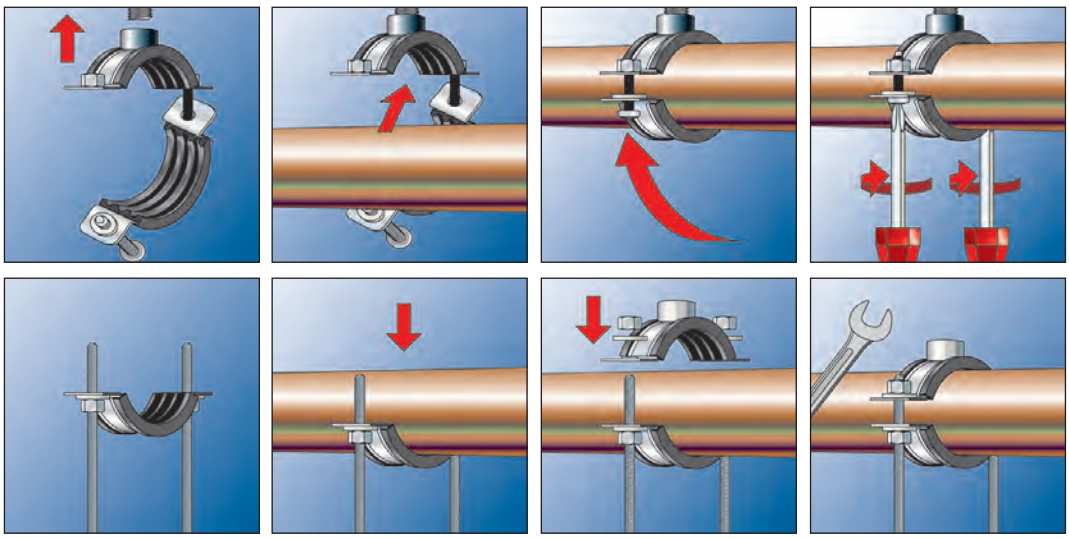

TECHNICAL DATA

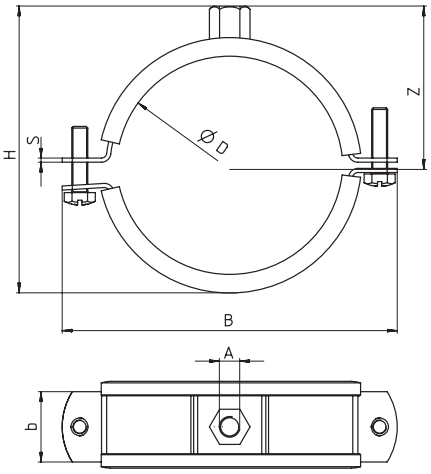

Item	Art.-No.	Thread A	Size [inch]	Clamping range D [mm]	Width B B [mm]	Height H H [mm]	Width x thickness clamp band b x s [mm]	Height Z Z [mm]	Locking screw	Max. recom. static load (centr. tension) $N_{recom.}$ [kN]	Sales unit [pcs]
FRSM 1/2" M10/M12	**504589**	M 10 / M 12	1/2"	19 - 23	76	57	25 x 2.5	39	M 6	2.50	50
FRSM 3/4" M10/M12	**504590**	M 10 / M 12	3/4"	24 - 29	80	63	25 x 2.5	42	M 6	2.50	50
FRSM 1" M10/M12	**504591**	M 10 / M 12	1"	33 - 36	89	70	25 x 2.5	45	M 6	2.50	50
FRSM 1 1/4" M10/M12	**504592**	M 10 / M 12	1 1/4"	40 - 45	98	79	25 x 2.5	50	M 6	2.50	20
FRSM 1 1/2" M10/M12	**093700**	M 10 / M 12	1 1/2"	47 - 52	105	86	25 x 2.5	53	M 6	2.50	20
FRSM 53 - 58 M10/M12	**093701**	M 10 / M 12	–	53 - 58	111	91	25 x 2.5	55	M 6	2.50	20
FRSM 2" M10/M12	**093702**	M 10 / M 12	2"	60 - 65	118	99	25 x 2.5	60	M 6	2.50	20
FRSM 2 1/2" M10/M12	**093703**	M 10 / M 12	2 1/2"	73 - 78	136	113	30 x 3,0	67	M 8	3.00	20
FRSM 79 - 85 M10/M12	**504593**	M 10 / M 12	–	79 - 85	144	120	30 x 3,0	70	M 8	3.00	20
FRSM 3" M10/M12	**093704**	M 10 / M 12	3"	88 - 93	152	129	30 x 3,0	75	M 8	3.00	20
FRSM 102 M10/M12	**093705**	M 10 / M 12	–	100 - 106	166	142	30 x 3,0	81	M 8	3.00	20
FRSM 4" M10/M12	**093707**	M 10 / M 12	4"	108 - 116	175	152	30 x 3,0	86	M 8	3.00	20
FRSM 124 - 129 M10/M12	**093709** 1)	M 10 / M 12	–	124 - 129	194	165	30 x 3,0	92	M 8	3.00	20
FRSM 131 - 137 M10/M12	**093710** 1)	M 10 / M 12	–	131 - 137	202	173	30 x 3,0	97	M 8	3.00	20
FRSM 138 - 145 M10/M12	**093711** 1)	M 10 / M 12	5"	138 - 145	210	180	30 x 3,0	100	M 8	3.00	20
FRSM 156 - 162 M10/M12	**093712** 1)	M 10 / M 12	–	156 - 162	227	198	30 x 3,0	109	M 8	3.00	20
FRSM 165 - 171 M10/M12	**093713** 1)	M 10 / M 12	6"	165 - 171	255	207	30 x 3,0	114	M 8	3.00	20
FRSM 188 - 194 M10/M12	**093714** 1)	M 10 / M 12	7"	188 - 194	278	230	30 x 3,0	125	M 8	3.00	10
FRSM 196 - 203 M10/M12	**093715** 1)	M 10 / M 12	–	196 - 203	287	239	30 x 3,0	130	M 8	3.00	10
FRSM 212 M12/M16	**505453** 1)	M 12 / M 16	–	205 - 214	289	264	40 x 4,0	147	M 12	5.00	10
FRSM 8" M12/M16	**505454** 1)	M 12 / M 16	8"	219 - 225	300	272	40 x 4,0	152	M 12	5.00	10
FRSM 250 M12/M16	**505455** 1)	M 12 / M 16	–	244 - 250	325	300	40 x 4,0	165	M 12	5.00	10
FRSM 10" M12/M16	**505456** 1)	M 12 / M 16	10"	267 - 273	348	323	40 x 4,0	177	M 12	5.00	10
FRSM 300 M12/M16	**505457** 1)	M 12 / M 16	–	297 - 304	379	354	40 x 4,0	192	M 12	5.00	10
FRSM 12" M12/M16	**505458** 1)	M 12 / M 16	12"	320 - 328	403	378	40 x 4,0	204	M 12	5.00	10
FRSM 348 - 356 M16	**504594** 1)	M 16	–	348 - 356	480	403	50 x 5,0	213	M 16	8.00	1
FRSM 364 - 372 M16	**504595** 1)	M 16	–	364 - 372	496	419	50 x 5,0	221	M 16	8.00	1
FRSM 400 - 409 M16	**504596** 1)	M 16	–	400 - 409	533	456	50 x 5,0	240	M 16	8.00	1
FRSM 454 - 462 M16	**504597** 1)	M 16	–	454 - 462	586	509	50 x 5,0	266	M 16	8.00	1
FRSM 500 - 508 M16	**504598** 1)	M 16	–	500 - 508	632	555	50 x 5,0	290	M 16	8.00	1

1) From diameter 124 mm the steel band is punched and delivered with separate locking screw and nut.

The two-screw refrigeration pipe clamp with integrated insulation

Refrigerant pipe clamps

APPLICATIONS

- Installation of pipes in refrigeration and air-conditioning applications

ADVANTAGES/BENEFITS

- The self-adhesive material ensures easy installation of the refrigeration pipe clamp.
- Age-resistant material ensures a long life of the FRS-K.
- The double-threaded connection nut allows for flexibility during the installation.
- The screw's safety feature ensures trouble-free installation.
- The integrated load distribution sheet guarantees the load transmission and allows higher loads.

PROPERTIES

- **Material:** polyurethan-foam, silicone-free
- **Diffusion resistance:** 7000 µ
- **Density:** 80 kg/m³
- **Compressive strength:** 0,67-0,75 mPa
- **Heat conductivity (at 0 °C):** 0,024-0,026 W/mK
- **Locking screw:** flat head screw with combination recessed head
- **Temperature range:** -45 °C to +105 °C
- **Fire behaviour:** DIN 4102: Class B2

TECHNICAL DATA

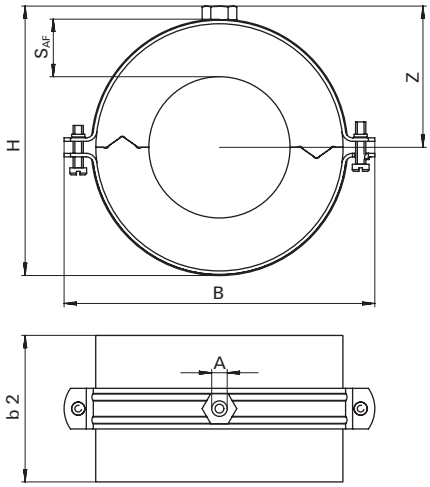

Item	Art.-No.	Size [inch]	Thread A	Insulation thickness S_{AF} [mm]	Width B B [mm]	Height H H [mm]	Height Z Z [mm]	Locking screw	Length of insulation material b2 [mm]	Max. recom. static load (centr. tension) $N_{recom.}$ [kN]	Sales unit [pcs]
FRS K 12/13	**506486**	–	M 8 / M 10	13	77	59	33	M 6	50	0.10	1
FRS K 15/13	**506487**	1/4"	M 8 / M 10	13	85	64	37	M 6	50	0.11	1
FRS K 17-18/13	**506488**	3/8"	M 8 / M 10	13	86	64	37	M 6	50	0.12	1
FRS K 21-22/13	**506489**	1/2"	M 8 / M 10	13	90.5	69	40	M 6	50	0.13	1
FRS K 27-28/13	**506490**	3/4"	M 8 / M 10	13	98.5	78	46	M 6	50	0.15	1
FRS K 34-35/13	**506491**	1"	M 8 / M 10	13	105	83	49	M 6	50	0.17	1
FRS K 42/13	**506492**	1 1/4"	M 8 / M 10	13	115	96	53	M 6	50	0.36	1
FRS K 48-49/13	**506493**	1 1/2"	M 8 / M 10	13	118	102	56	M 6	50	0.39	1
FRS K 54/13	**507699**	–	M 8 / M 10	13	125	107	59	M 8	50	0.42	1
FRS K 60/13	**506494**	2"	M 8 / M 10	13	132	115	63	M 6	50	0.45	1
FRS K 12/19	**506495**	–	M 8 / M 10	19	90	71	41	M 6	50	0.14	1
FRS K 15/19	**506496**	1/4"	M 8 / M 10	19	90.5	74	42	M 6	50	0.15	1
FRS K 17-18/19	**506497**	3/8"	M 8 / M 10	19	99	77	44	M 6	50	0.15	1
FRS K 21-22/19	**506498**	1/2"	M 8 / M 10	19	99	77	44	M 6	50	0.16	1
FRS K 27-28/19	**506499**	3/4"	M 8 / M 10	19	106	90	50	M 6	50	0.18	1
FRS K 34-35/19	**506500**	1"	M 8 / M 10	19	115	97	53	M 6	50	0.20	1
FRS K 42/19	**506501**	1 1/4"	M 8 / M 10	19	125	109	59	M 6	50	0.42	1
FRS K 48-49/19	**506502**	1 1/2"	M 8 / M 10	19	132	116	62.5	M 6	50	0.45	1
FRS K 54/19	**507700**	–	M 8 / M 10	19	143	123	65.5	M 8	50	0.48	1
FRS K 60/19	**506503**	2"	M 8 / M 10	19	147	129	69	M 6	50	0.51	1
FRS K 64/19	**506504**	–	M 8 / M 10	19	149	134	71	M 6	50	0.53	1
FRS K 70/19	**506505**	–	M 8 / M 10	19	161	142	75	M 6	50	0.56	1
FRS K 76/19	**506506**	2 1/2"	M 8 / M 10	19	162.5	147	77	M 6	50	0.60	1
FRS K 89/19	**506508**	3"	M 8 / M 10	19	188	165	86.5	M 8	50	0.66	1
FRS K 102/19	**506509**	–	M 8 / M 10	19	199	180	94.5	M 8	100	1.69	1
FRS K 108/19	**506510**	–	M 8 / M 10	19	204	185	97	M 8	100	1.77	1
FRS K 114/19	**506511**	4"	M 8 / M 10	19	241	201	112	M 8	100	1.84	1
FRS K 133/19	**507786**	–	M 12 / M 16	19	270	221	122	M 12	100	2.07	1
FRS K 139/19	**507787**	5"	M 12 / M 16	19	270	227	125	M 12	100	2.14	1
FRS K 168/19	**507788**	6"	M 12 / M 16	19	281	256	139	M 12	100	2.49	1
FRS K 219/19	**539477**	8"	M 12 / M 16	19	346	290	156.6	M 12	100	2,94	1

The two-screw refrigeration pipe clamp made from closed PUR foam

Refrigerant pipe clamps

Refrigerant pipe clamp on sliding element

APPLICATIONS

- Installation of pipes in refrigeration and air-conditioning applications with high loads

ADVANTAGES/BENEFITS

- The refrigeration pipe clamp KFT made from closed PUR foam can be used with all standard insulation materials.
- The glued rubber overlay makes the installation easier.
- The triple-threaded connection nut M8 / M10 / 1/2" allows for flexibility during the installation.
- Age-resistant material ensures the long-term functionality of the KFT.
- The two screws allow an easy adjustment to suit the outer pipe diameter.

PROPERTIES

- **Material:** closed-cell polyurethane foam, silicone-free
- **Diffusion resistance:** 1000 µ
- **Density:** 250 kg/m³
- **Compression strength:** 3,96 mPa at 23 °C
- **Heat conductivity (at 0 °C):** 0,049 W/(m*K)
- **Temperature range:** -160 °C to +130 °C
- **Fire behaviour:** DIN 4102: Class B2

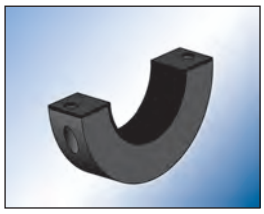

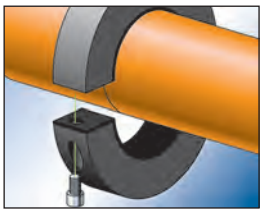

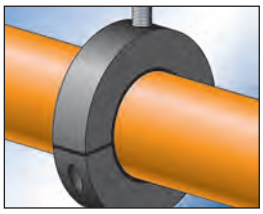

TECHNICAL DATA

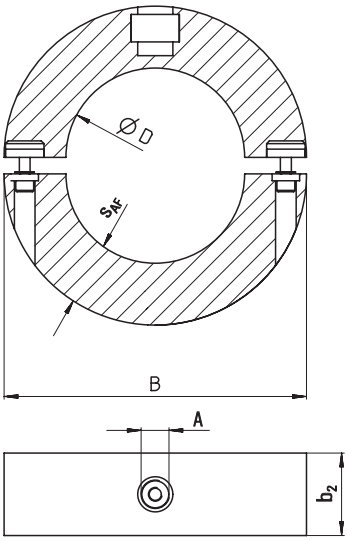

Item	Art.-No.	Thread A	Internal diameter D [mm]	Width B B [mm]	Locking screw	Insulation thickness S_{AF} [mm]	Length of insulation material b2 [mm]	Max. recom. static load (centr. tension) $N_{recom.}$ [kN]	Sales unit [pcs]
KFT 9,5	**505576** 1)	M 8 / M 10 / 1/2"	9,5	88	M 6	30	40	0.15	1
KFT 12,7	**505577**	M 8 / M 10 / 1/2"	12,7	88	M 6	30	40	0.20	1
KFT 15,8	**505578**	M 8 / M 10 / 1/2"	15,8	88	M 6	30	40	0.21	1
KFT 17,2	**505579** 1)	M 8 / M 10 / 1/2"	17,2	88	M 6	30	40	0.21	1
KFT 18,0	**505580**	M 8 / M 10 / 1/2"	18,0	88	M 6	30	40	0.21	1
KFT 19,5	**505581** 1)	M 8 / M 10 / 1/2"	19,5	88	M 6	30	40	0.21	1
KFT 21,3	**505582**	M 8 / M 10 / 1/2"	21,3	88	M 6	30	40	0.26	1
KFT 22,0	**505583**	M 8 / M 10 / 1/2"	22,0	88	M 6	30	40	0.26	1
KFT 26,9	**505584**	M 8 / M 10 / 1/2"	26,9	88	M 6	30	40	0.32	1
KFT 28,0	**505585**	M 8 / M 10 / 1/2"	28,0	88	M 6	30	40	0.32	1
KFT 33,7	**505587**	M 8 / M 10 / 1/2"	33,7	96	M 6	30	40	0.40	1
KFT 35,0	**505588**	M 8 / M 10 / 1/2"	35,0	96	M 6	30	40	0.42	1
KFT 40,0	**505589** 1)	M 8 / M 10 / 1/2"	40,0	100	M 6	30	40	0.42	1
KFT 41,2	**505591**	M 8 / M 10 / 1/2"	41,2	100	M 6	30	40	0.51	1
KFT 42,4	**505592**	M 8 / M 10 / 1/2"	42,4	103	M 6	30	40	0.51	1
KFT 44,5	**505593** 1)	M 8 / M 10 / 1/2"	44,5	103	M 6	30	40	0.51	1
KFT 48,3	**505594**	M 8 / M 10 / 1/2"	48,3	102	M 6	30	40	0.58	1
KFT 50,0	**505595** 1)	M 8 / M 10 / 1/2"	50,0	112	M 6	30	40	0.60	1
KFT 54,0	**505596**	M 8 / M 10 / 1/2"	54,0	116	M 6	30	40	0.62	1
KFT 57,0	**505597**	M 8 / M 10 / 1/2"	57,0	116	M 6	30	40	0.65	1
KFT 60,3	**505598**	M 8 / M 10 / 1/2"	60,3	123	M 6	30	50	0.72	1
KFT 64,0	**505599**	M 8 / M 10 / 1/2"	64,0	123	M 6	30	50	0.77	1
KFT 70,0	**505901**	M 8 / M 10 / 1/2"	70,0	132	M 8	30	50	1.26	1
KFT 74,0	**505902** 1)	M 8 / M 10 / 1/2"	74,0	132	M 8	30	50	1.26	1
KFT 76,1	**505903**	M 8 / M 10 / 1/2"	76,1	132	M 8	30	50	1.37	1
KFT 80,0	**505904** 1)	M 8 / M 10 / 1/2"	80,0	132	M 8	30	50	1.37	1
KFT 84,0	**505905** 1)	M 8 / M 10 / 1/2"	84,0	150	M 8	30	50	1.60	1
KFT 88,9	**505906**	M 8 / M 10 / 1/2"	88,0	150	M 8	30	50	1.60	1
KFT 92,1	**505907** 1)	M 8 / M 10 / 1/2"	92,1	150	M 8	30	50	1.60	1
KFT 101,0	**505908** 1)	M 8 / M 10 / 1/2"	101,0	188	M 8	40	60	2.59	1
KFT 104,0	**505909** 1)	M 8 / M 10 / 1/2"	104,0	188	M 8	40	60	2.59	1
KFT 108,0	**505910**	M 8 / M 10 / 1/2"	108,0	188	M 8	40	60	2.59	1
KFT 114,3	**505911**	M 8 / M 10 / 1/2"	114,3	195	M 8	40	60	2.74	1
KFT 129,0	**505914** 1)	M 8 / M 10 / 1/2"	129,0	220	M 8	40	60	3.19	1
KFT 133,0	**505915**	M 8 / M 10 / 1/2"	133,0	220	M 8	40	60	3.19	1

1) delivery on request

Refrigeration pipe clamp KFT

TECHNICAL DATA

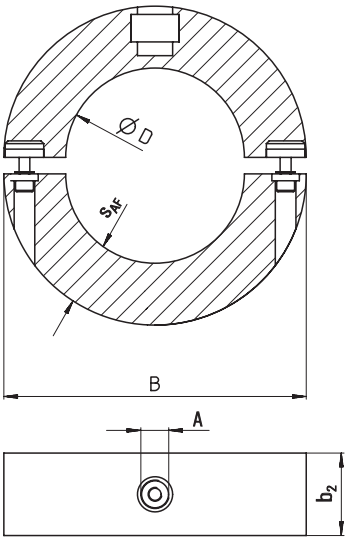

Item	Art.-No.	Thread A	Internal diameter D [mm]	Width B B [mm]	Locking screw	Insulation thickness S_{AF} [mm]	Length of insulation material b2 [mm]	Max. recom. static load (centr. tension) $N_{recom.}$ [kN]	Sales unit [pcs]
KFT 139,7	**505916**	M 8 / M 10 / 1/2"	139,7	220	M 8	40	60	3.35	1
KFT 154,0	**505917** 1)	M 12 / 1/2"	154,0	239	M 10	40	60	3.83	1
KFT 159,0	**505918**	M 12 / 1/2"	159,0	239	M 10	40	60	3.83	1
KFT 168,3	**505919**	M 12 / 1/2"	168,3	250	M 10	40	60	4.04	1
KFT 193,7	**505920**	M 16 / 1/2"	193,7	340	M 10	60	100	5.26	1
KFT 204,0	**505921**	M 16 / 1/2"	204,0	340	M 10	60	100	5.20	1
KFT 219,1	**505922**	M 16 / 1/2"	219,1	340	M 10	60	100	5.26	1

1) delivery on request

The U-bolt with metric thread

APPLICATIONS

- Installation of standing or hanging pipes
- Pipe routing on profiles and consoles

ADVANTAGES/BENEFITS

- The U-bolt's two screws allow an ideal adaptation to suit the outer pipe diameter.

PROPERTIES

- **Material:** steel with min. tensile strength of 360 N/mm²
- **Zinc plating:** electro zinc-plated

TECHNICAL DATA

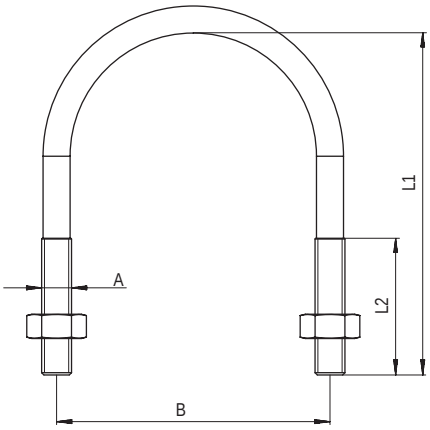

Item	Art.-No.	Thread A	Length L_1 [mm]	Length L_2 [mm]	Size [inch]	Width B B [mm]	Sales unit [pcs]		
ETR 8 - 13	**024415**	M 6	30	20	1/4"	20	10		
ETR 12 - 17	**024416**	M 6	35	20	3/8"	24	10		
ETR 15 - 21	**024417**	M 6	40	25	1/2"	28	10		
ETR 20 - 27	**024418**	M 8	50	32	3/4"	36	10		
ETR 26 - 34	**024419**	M 8	55	32	1"	43	10		
ETR 33 - 42	**024420**	M 8	68	38	1 1/4"	51	10		
ETR 40 - 49	**024421**	M 8	70	38	1 1/2"	58	10		
ETR 50 - 60	**024422**	M 8	80	40	2"	69	10		
ETR 60 - 70	**024423**	M 10	100	43	–	82	10		
ETR 66 - 76	**024424**	M 10	110	50	2 1/2"	88	10		
ETR 70 - 82	**024425**	M 10	115	50	–	94	10		
ETR 80 - 90	**024426**	M 10	115	50	3"	102	10		
ETR 90 - 102	**024427**	M 12	145	55	3 1/2"	116	5		
ETR 100 - 108	**024428**	M 12	150	50	–	122	5		
ETR 102 - 114	**024429**	M 12	156	60	4"	128	5		
ETR 121 - 127	**024430**	M 12	170	60	–	141	5		
ETR 126 - 133	**024431**	M 12	180	70	–	147	5		
ETR 131 - 140	**024432**	M 14	185	70	5"	156	5		
ETR 143 - 153	**024433** 1)	M 14	193	70	–	169	5		
ETR 150 - 159	**024434**	M 14	200	70	–	175	5		
ETR 168	**024435**	M 14	210	70	6"	184	5		
ETR 193,7	**024436**	M 14	232	70	–	209	5		
ETR 219	**024437**	M 14	270	70	8"	236	5		

1) Delivery time on request.

The universal sprinkler loop

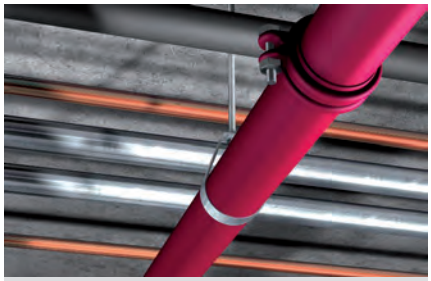

Sprinkler pipe installation

APPLICATIONS

- Installation of sprinkler pipes

ADVANTAGES/BENEFITS

- The FM-approval guarantees independently tested safety for the use in sprinkler systems.
- The sprinkler loop with clearance hole enables an easy fixing with threaded rod and nut.

CERTIFICATES

FM APPROVED

From thread M10.

PROPERTIES

- **Material:** steel DX51D+Z 275 MA acc. to DIN EN 10142
- **Zinc plating:** sendzimir-galvanised, min. 15 µm

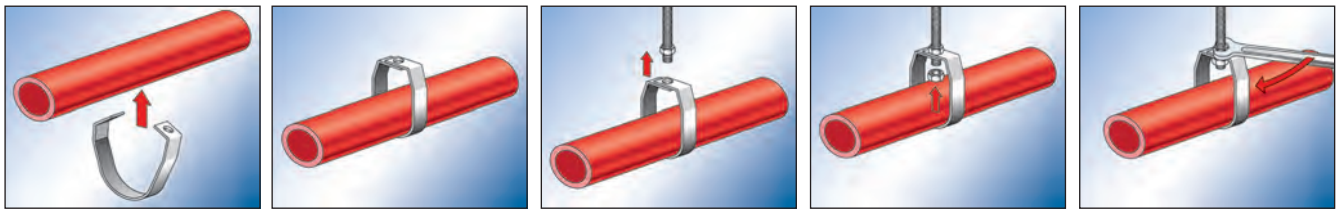

TECHNICAL DATA

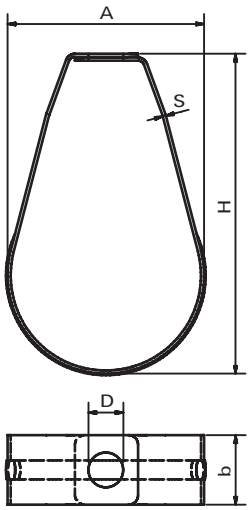

		FM approved	Eye-Ø D	Width A	Height H H	Width x thickness clamp band b x s	Max. recom. static load (centr. tension) $N_{recom.}$	Sales unit		
Item	Art.-No.		[mm]	[mm]	[mm]	[mm]	[kN]	[pcs]		
FRSP 1/2"	**524035**	–	11	46	62	22 x 1,0	1.50	100		
FRSP 3/4"	**524036**	X	11	46	62	22 x 1,0	1.50	100		
FRSP 1"	**524037**	X	11	46	70	22 x 1,0	1.50	100		
FRSP 1 1/4"	**524038**	X	11	50	82	22 x 1,0	1.50	100		
FRSP 1 1/2"	**524039**	X	11	50	93	22 x 1,0	1.50	100		
FRSP 2"	**524040**	X	11	62.2	102	22 x 1,0	1.50	100		
FRSP 2 1/2"	**524041**	X	11	82	120	22 x 1,5	4.50	50		
FRSP 3"	**524042**	X	11	94.9	139	22 x 1,5	4.50	50		
FRSP 4"	**524043**	X	11	117.2	180	22 x 1,5	4.50	25		
FRSP 5"	**524044**	X	13	143.6	218	32 x 2,0	5.20	20		
FRSP 6"	**524045**	X	13	172.2	237	32 x 2,0	5.20	15		
FRSP 8"	**524046**	X	16,5	224	318	32 x 2,5	5.20	10		

The premium sprinkler loop with separable band and height adjustment, VdS approved

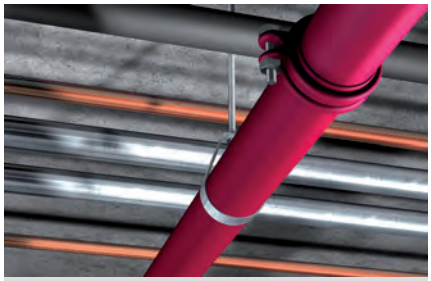

Sprinkler pipe installation

APPLICATIONS

- Installation of sprinkler pipes according VdS

ADVANTAGES/BENEFITS

- The VdS approval guarantees independently tested safety for the use in sprinkler systems.
- The adjustment nut enables a simple, post-installation height adjustment of the pipes.

CERTIFICATES

VdS

G 410037 / G 410034

PROPERTIES

- **Material pipe loop:** steel DX51D acc. to DIN EN 10346, material no. 1.0226 (Z140 N-A-C)
- **Material adjustment nut:** steel 11 SMnPb 30 acc. to DIN EN 10087, material no. 1.0718
- **Zinc plating:** sendzimir-galvanised, min. 8 µm

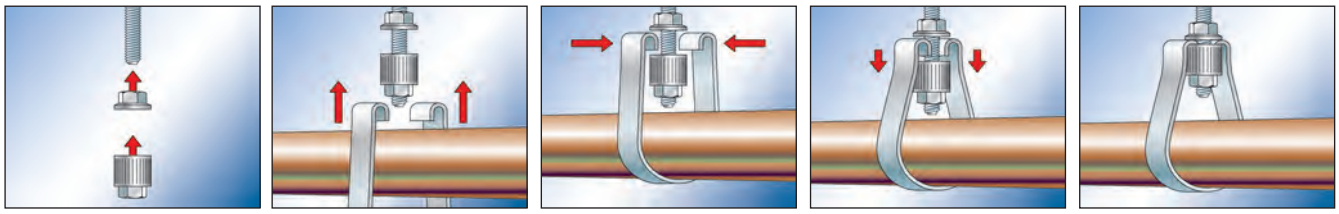

TECHNICAL DATA

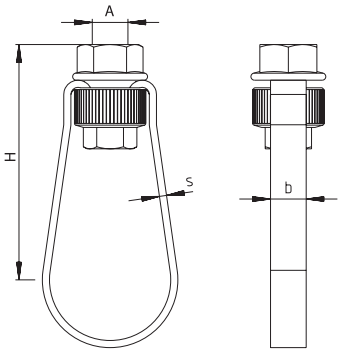

		VdS approved	Size	Thread A	Height H H	Width x thickness clamp band b x s	Max. recom. static load (centr. tension) $N_{recom.}$	Sales unit		
Item	**Art.-No.**		**[inch]**		**[mm]**	**[mm]**	**[kN]**	**[pcs]**		
FRSL 34 M8	**538082**	**X**	1"	M 8	67	10 x 1,8	2.0	50		
FRSL 43 M8	**538083**	**X**	1 1/4"	M 8	67	10 x 1,8	2.0	50		
FRSL 49 M8	**538084**	**X**	1 1/2"	M 8	72	10 x 1,8	2.0	50		
FRSL 60 M8	**538085**	**X**	2"	M 8	81	10 x 1,8	2.0	50		
FRSL 34	**513302**	**X**	1"	M 10	67	10 x 1,8	2.0	50		
FRSL 43	**513303**	**X**	1 1/4"	M 10	67	10 x 1,8	2.0	50		
FRSL 49	**513304**	**X**	1 1/2"	M 10	72	10 x 1,8	2.0	50		
FRSL 60	**513307**	**X**	2"	M 10	81	10 x 1,8	2.0	50		
FRSL 76	**513308**	**X**	2 1/2"	M 10	98	10 x 2,5	3.5	25		
FRSL 90	**513309**	**X**	3"	M 10	113	10 x 2,5	3.5	25		
FRSL 115	**513310**	**X**	4"	M 10	143	10 x 2,5	3.5	25		
FRSL 140	**513311**	**X**	5"	M 12	157	13 x 2.5	5.0	25		
FRSL 170	**513312**	**X**	6"	M 12	187	13 x 2.5	5.0	25		

The easy handling pipe and cable clamp for direct attachment of lines to FUS mounting rails

Supply lines fixed to FUS channel

APPLICATIONS

- Fast installation of metal and plastic pipes, flexible plastic pipes or cables without sound insulation requirements directly to FUS installation channels
- Fits to FUS channels FUS 21, FUS 41, FUS 62, FUS 21D, FUS 41D, FUS 62D

ADVANTAGES/BENEFITS

- The FUBD without soundproofing is ideal for use in industrial applications, for example, for fixing lightweight flexible supply lines in the immediate area of production machines.
- Locking screw with hexagonal and slot drive.
- Quick adaptation to the desired outside pipe diameter by fastening the pressure pan.
- No loss of parts due to preassembled parts.
- Time- and cost-saving installation without the need of accessories like threaded rods or sliding nuts.

PROPERTIES

- **Material U-Strap:** steel S235JRC (Werkstoff-Nr.: 1.0122) acc. to EN 10025
- **Zinc plating U-Strap:** hot-dip galvanised min. 35 µm acc. to DIN EN ISO 1461
- **Material Pressure pan:** steel DX51D acc. to DIN EN 10346
- **Zinc plating Pressure pan:** electro zinc plated, min. 5 µm acc. to DIN EN ISO 4042
- **Material Locking screw:** steel 4.6 acc. to EN 20898-1
- **Locking screw:** with hexagonal SW10 and slot head

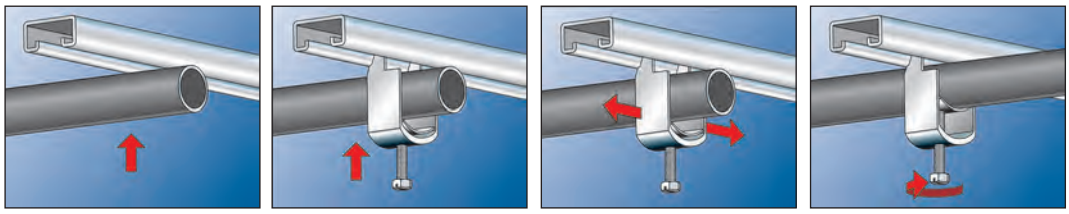

TECHNICAL DATA

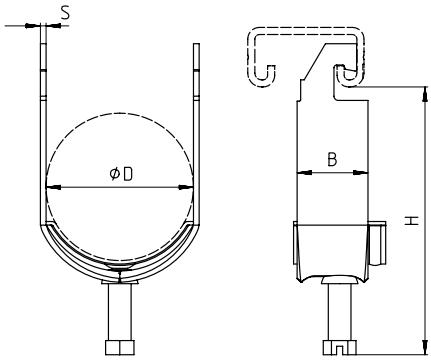

Item	Art.-No.	Clamping range D [mm]	Height H H [mm]	Width x thickness clamp band b x s [mm]	Locking screw	Sales unit [pcs]
FUBD 40	**539564**	36 - 40	71	25 x 1,75	M 6 x 24	100
FUBD 52	**539566**	48 - 52	90	25 x 2,0	M 8 x 30	50
FUBD 60	**539567**	56 - 60	98	30 x 2,25	M 8 x 30	50
FUBD 76	**539568**	70 - 76	113	30 x 2,75	M 8 x 30	25
FUBD 94	**539569**	88 - 94	141	30 x 2,75	M8 x 40	20
FUBD 100	**539570**	94 - 100	147	30 x 2,75	M8 x 40	10

The hose clamp for large hoses, pipe or ducting

APPLICATIONS

- Sealing of hoses
- Fixing hoses to adapters

ADVANTAGES/BENEFITS

- The crimped band edges offer protection against damage to the hose.
- The short base of the hosing allows an ideal adjustment and high, radial forces on the hose diameter.
- The screw's combination cross-drive thread enables installation flexibility.

PROPERTIES

- **Material class:** W 2
- **Worm:** CQ 15 (material no. 1.1132) acc. to DIN EN 10263
- **Housing and band:** chromium steel (material no. 1.4016) acc. to DIN EN 10088 or equivalent corrosion-resistant steel

TECHNICAL DATA

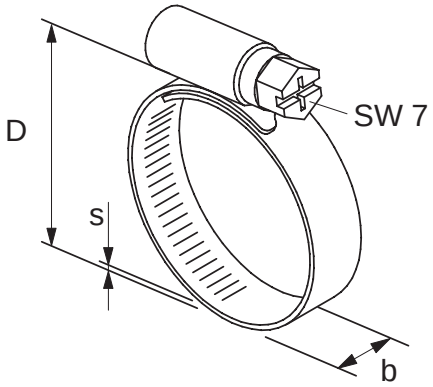

Item	Art.-No.	Clamping range D [mm]	Width x thickness clamp band b x s [mm]	Sales unit [pcs]
SGS 9 W2 8 - 12	**045517**	8 - 12	9,0 x 0,6	100
SGS 9 W2 10 - 16	**045518**	10 - 16	9,0 x 0,6	100
SGS 9 W2 12 - 20	**045519**	12 - 20	9,0 x 0,6	100
SGS 9 W2 16 - 27	**045520**	16 - 27	9,0 x 0,6	100
SGS 9 W2 20 - 32	**045521**	20 - 32	9,0 x 0,6	100
SGS 9 W2 25 - 40	**045522**	25 - 40	9,0 x 0,6	100
SGS 9 W2 32 - 50	**045523**	32 - 50	9,0 x 0,6	100
SGS 9 W2 40 - 60	**045524**	40 - 60	9,0 x 0,6	25
SGS 9 W2 50 - 70	**045525**	50 - 70	9,0 x 0,6	25
SGS 9 W2 60 - 80	**045526**	60 - 80	9,0 x 0,6	25
SGS 9 W2 70 - 90	**045527**	70 - 90	9,0 x 0,6	25
SGS 9 W2 80 -100	**045528**	80 - 100	9,0 x 0,6	25
SGS 9 W2 90 -110	**045529**	90 - 110	9,0 x 0,6	25
SGS 9 W2 100 -120	**045530**	100 - 120	9,0 x 0,6	25
SGS 9 W2 110 -130	**045531**	110 - 130	9,0 x 0,6	25
SGS 9 W2 120 -140	**045532**	120 - 140	9,0 x 0,6	25

fischer
innovative solutions

2b Channel system FLS

	Page
CHANNELS	
Channel FLS	62
FLS Cutting Tool	65
CONSOLES	
Cantilever arm ALK	67
Cover cap AK	69
Angle brace WS 31-45°	70
CONNECTORS	
Sliding channel nut FSM Clix P	74
Sliding channel nut FSM Clix M	76
T-head bolt FHS Clix	78
Channel washer HK 31	86

	Page
CONSTRUCTION ELEMENTS	
Channel connector SV 31	72
Saddle flange SF Clix 31	80
Angle bracket MW Clix 90°	82
Angle bracket MW and MWU	84
Beam clamp TKR 31	87

The flexible channel system for light applications

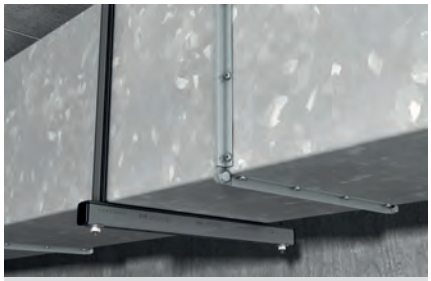

Air duct fixing with channel

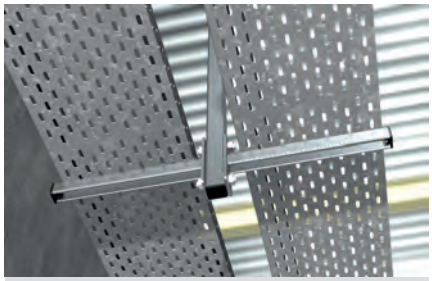

Suspended cable tray fixing

APPLICATIONS

- The U-profile channels enable the creation of secure, horizontal and vertical installations.
- The channel system is suitable for fast and efficient fixings of pipelines and supporting structures.

ADVANTAGES/BENEFITS

- The fire inspection report in line with MLAR/EN1363-1 of the FLS 37 guarantees independently tested functional safety.
- The channel shape with edge seams gives a perfect fit for the connector elements and leads to a safe and easy installation.
- The serration with stamped teeth in the mounting channel gives the sliding nuts a secure hold to bear high shear loads.
- The scale on the channels simplifies the cutting of the channels and the positioning of the connector elements during installation.
- The alternating long slots in the channel enable the optimised fixing to the substrate with the perfect fixtures.

CERTIFICATES

PROPERTIES

- **Material:** pre-galvanised steel S-250-GD+Z275 (material no.: 1.0242) acc. to DIN EN 10346

TECHNICAL DATA

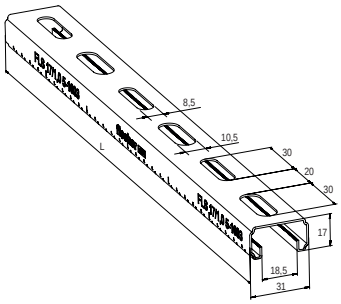

FLS 17/1.0

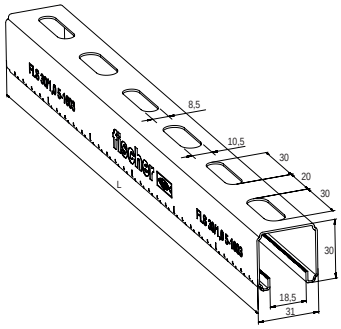

FLS 30/1.0

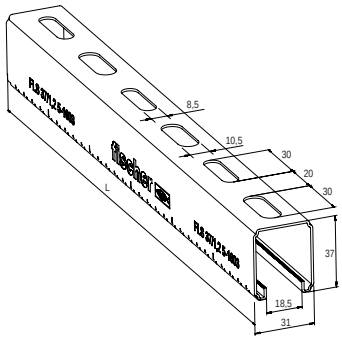

FLS 37/1.2

Item	Art.-No.	Fire test report	Thickness S [mm]	Length L [mm]	Sales unit [pcs]
FLS 17/1.0 - 2 m	**538753**	–	1.0	2000	10
FLS 17/1.0 - 3 m	**538754**	–	1.0	3000	8
FLS 30/1.0 - 2 m	**538755**	–	1.0	2000	10
FLS 30/1.0 - 3 m	**538756**	–	1.0	3000	8
FLS 37/1.2 - 2 m	**538757**	X	1.2	2000	10
FLS 37/1.2 - 3 m	**538758**	X	1.2	3000	8
FLS 37/1.2 - 6 m	**538759**	X	1.2	6000	1

LOADS

Item	Art.-No.	Weight [kg/m]	Profile cross section [cm²]	Moment of inertia I_y [cm4]	Moment of inertia I_z [cm4]	Section modulus W_y [cm³]	Section modulus W_z [cm³]	Max. recommended static load for 1m length F_{rec} [kN]
FLS 17/1.0 - 2 m	**538753**	0.58	0.72	0.25	0.91	0.26	0.59	0.13
FLS 17/1.0 - 3 m	**538754**	0.58	0.72	0.25	0.91	0.26	0.59	0.13
FLS 30/1.0 - 2 m	**538755**	0.78	0.98	1.02	1.46	0.64	0.94	0.48
FLS 30/1.0 - 3 m	**538756**	0.78	0.98	1.02	1.46	0.64	0.94	0.48
FLS 37/1.2 - 2 m	**538757**	1.06	1.33	2.03	2.01	1.04	1.29	0.78
FLS 37/1.2 - 3 m	**538758**	1.06	1.33	2.03	2.01	1.04	1.29	0.78
FLS 37/1.2 - 6 m	**538759**	1.06	1.33	2.03	2.01	1.04	1.29	0.78

SEE ALSO

ULTRACUT FBS II

see page 307

Load case 1

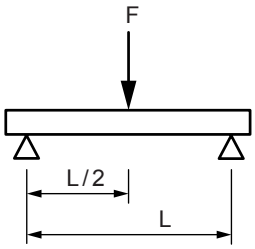

Load case 2

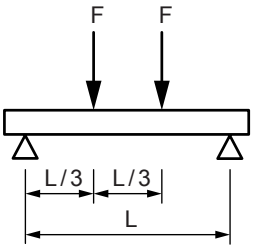

Load case 3

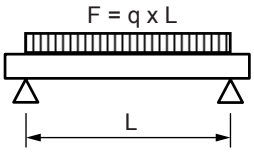

FLS 17/1.0

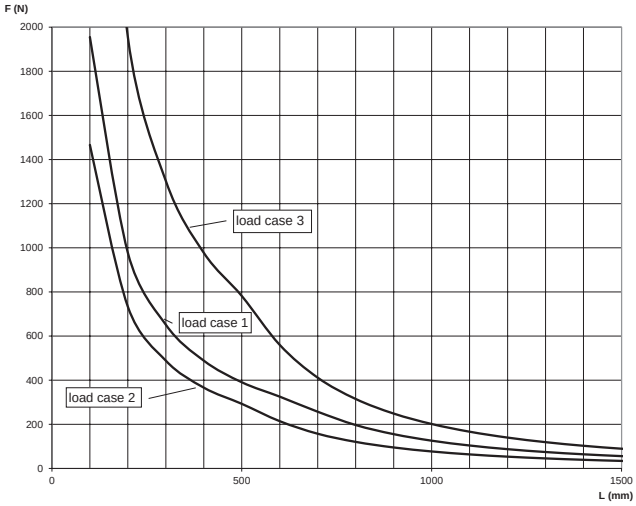

FLS 30/1.0

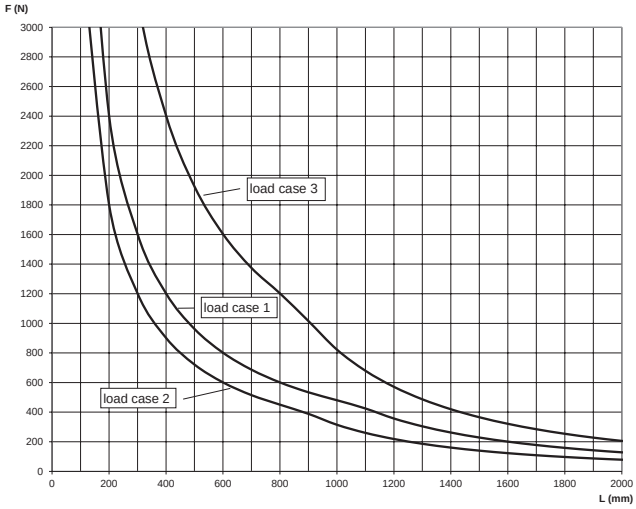

FLS 37/1.2

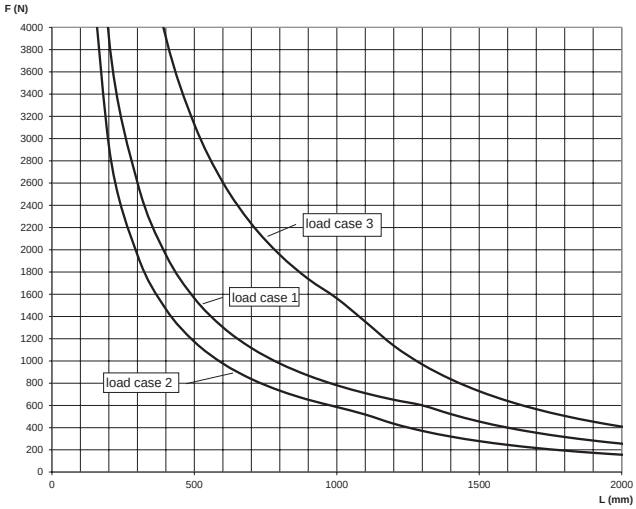

For the load curves, the permissible steel strain $\delta_{adm.}$ = 188 N/mm (increased steel strain due to bending)and the maximum deflection under load L/200 are not exceeded. Fixings and screw fastenings must be calculated accordingly. The higher yield strength is a result of the calculation according to DIN EN 1993-1-3:2010-12, para. 3.2.2.

The Cutting Tool for FLS channels

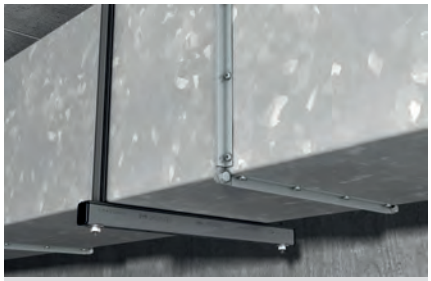

Air duct fixing with channel

Pipe fixing on frame construction

APPLICATIONS

Efficient cutting of the FLS channels to the required length for processing in the installation.

ADVANTAGES/BENEFITS

- The FLS cutting tool for the three FLS channel sizes guarantees the most economical type of channel cutting, including length measurement by the integrated 1m-measuring unit.
- Simple burr-free cutting instead of sawing the channel profile to avoid the complex and time consuming re-working of the edges.
- The cutting process avoids falling metal chips as during the sawing process for a dirt free workplace.
- The manual cutting tool, which is always ready for use, allows an almost noiseless use.
- Due to the profile-shaped openings in the cutting tool, incorrect use is permanently avoided.

PROPERTIES

- **Material:** tempered tooling steel

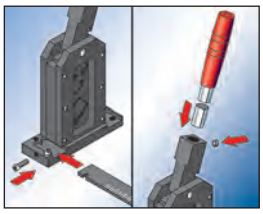

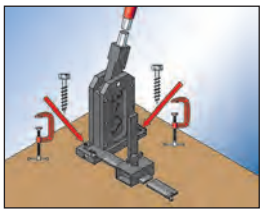

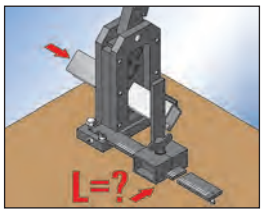

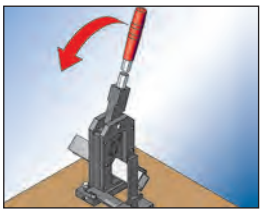

FLS Cutting Tool

TECHNICAL DATA

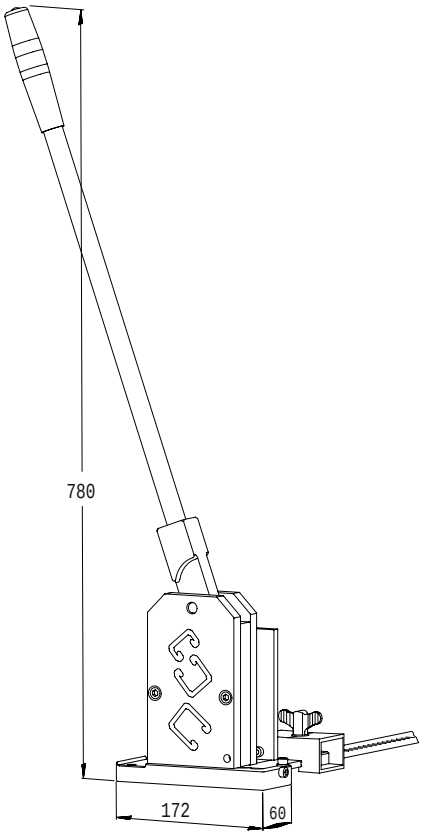

FLS cutting tool manual

Item	Art.-No.	Performance data	Sales unit [pcs]
FLS cutting tool manual	**543965**	Incl. Operating lever and 1m measuring unit for length adjusment	1

fischer innovative solutions

Cantilever arm made from FLS channel profile

Pipe fixing at the wall

Cable tray on cantilever arm

APPLICATIONS

- The ALK cantilever arm allows the economic installation of single pipes or pipelines along the wall.

ADVANTAGES/BENEFITS

- The fire inspection report in line with MLAR/EN1363-1 of the ALK 37 guarantees independently tested functional safety.
- The graduated range of lengths allows an ideal adaptation to the application.
- The console's stable base plate offers a secure hold for a load-bearing construction.
- The base plate's long slots, which are at 90° to one another, allow the console to be easily aligned.

CERTIFICATES

Fire resistance classification R120 according DIN EN 1363-1

MLAR R 30

PROPERTIES

- **Material Base plate:** steel E295 (material no.: 1.0050) acc. to DIN EN 10025-2
- **Material Channel:** steel S215 G (material no.: 10116 G) acc. to DIN 1623
- **Zinc plating:** electro zinc-plated, min. 13 µm

TECHNICAL DATA

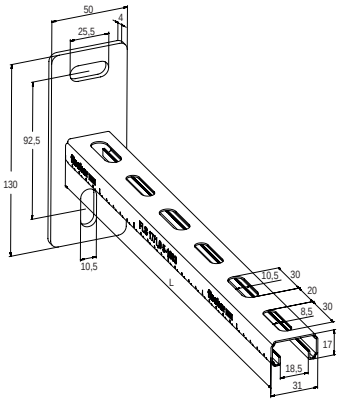

ALK 17

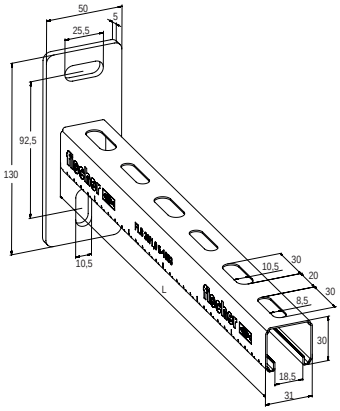

ALK 30

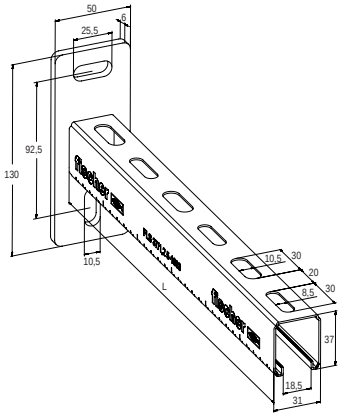

ALK 37

Item	Art.-No.	Fire test report	Profile	Length L [mm]	Sales unit [pcs]
ALK 17-200	538738	–	17/1,0	200	10
ALK 17-300	538739	–	17/1,0	300	10
ALK 30-200	538740	–	30/1,0	200	10
ALK 30-300	538741	–	30/1,0	300	10
ALK 30-450	538742	–	30/1,0	450	10
ALK 37-300	538743	X	37/1,2	300	10
ALK 37-450	538744	X	37/1,2	450	10
ALK 37-600	538745	X	37/1,2	600	5

Cantilever arm ALK

LOADS

Item	Art.-No.	Max. recommended static load load case 1 F_{rec} [kN]	Max. recommended static load load case 2 F_{rec} [kN]	Max. recommended static load load case 3 F_{rec} [kN]
ALK 17-200	**538738**	0.49	0.24	0.49
ALK 17-300	**538739**	0.33	0.12	0.31
ALK 30-200	**538740**	1.18	0.59	1.18
ALK 30-300	**538741**	0.79	0.39	0.79
ALK 30-450	**538742**	0.53	0.22	0.53
ALK 37-300	**538743**	1.27	0.64	1.27
ALK 37-450	**538744**	0.86	0.41	0.86
ALK 37-600	**538745**	0.63	0.24	0.63

Load case 1

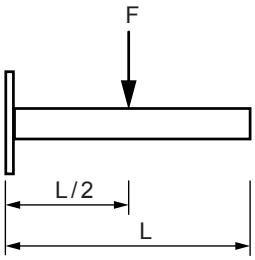

Load case 2

Load case 3

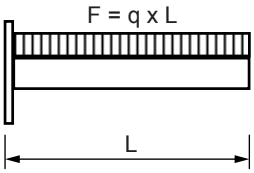

ALK 17/1.0

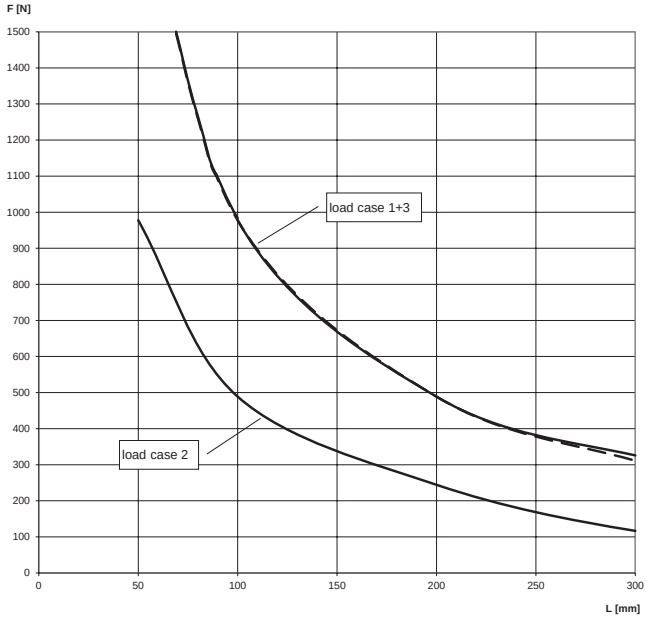

ALK 30/1.0

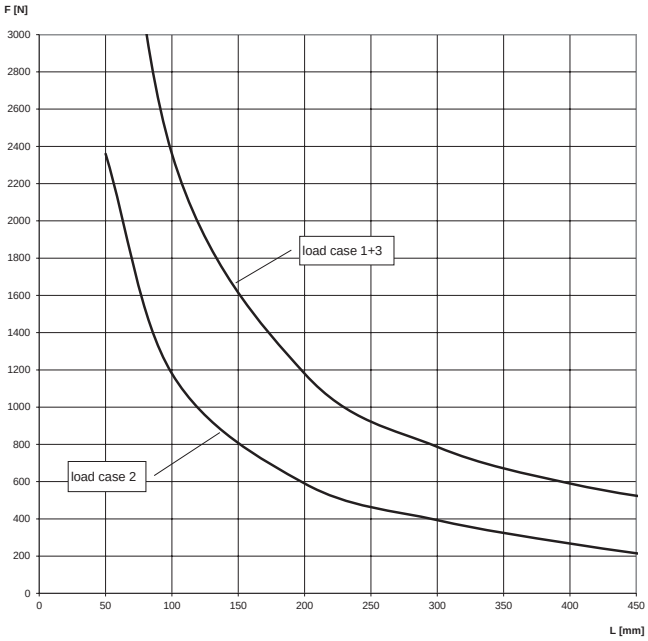

For the load curves, the permissible steel strain $\delta_{adm.}$ = 188 N/mm² (increased steel strain due to bending) and the maximum deflection under load L/150 are not exceeded. Fixings and screw fastenings must be calculated accordingly.

SEE ALSO

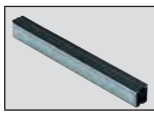

EMS
Art.-No. 538752

ALK 37/1.2

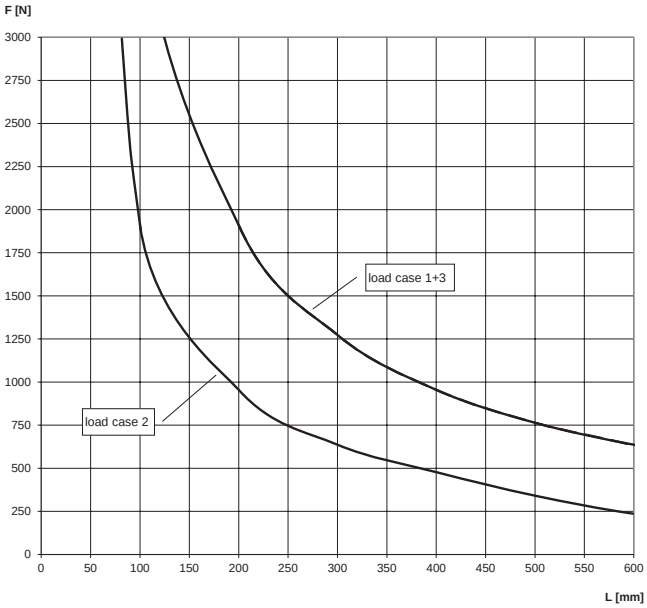

For the load curves, the permissible steel strain $\delta_{adm.}$ = 188 N/mm² (increased steel strain due to bending) and the maximum deflection under load L/150 are not exceeded. Fixings and screw fastenings must be calculated accordingly.

COVER CAP AK

AK 17

AK 30

AK 37

Item	Art.-No.	For profile	Material	Sales unit [pcs]
AK 17	**538746**	17/1.0	polypropylene	100
AK 30	**538747**	30/1.0	polypropylene	100
AK 37	**538748**	37/1.2	polypropylene	100

Angle brace for stable constructions

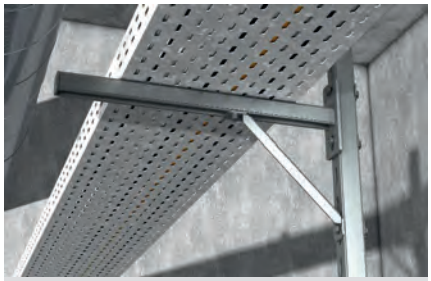

Cable tray on cantilever construction

Ventilating pipe fixing at the wall

APPLICATIONS

- Angle brace to construct self- supporting channel constructions with FLS channels or ALK cantilever arms.

ADVANTAGES/BENEFITS

- The stable angle brace element WS 31-45° lends the supporting structure a great stability and safety.
- The size of the angle brace element guarantees a secure connection with ALK cantilever arms and FLS channels by it's fitting accuracy.
- The standardised long slots in the angle brace enable an exact connection to ALK cantilever arms or FLS channels by using FSM Clix P and a screw.

PROPERTIES

- **Material:** steel S235 JR (material no.: 1.0037) acc. to DIN EN 10025
- **Zinc plating:** electro zinc-plated, min. 5 µm acc. DIN EN ISO 4042

TECHNICAL DATA

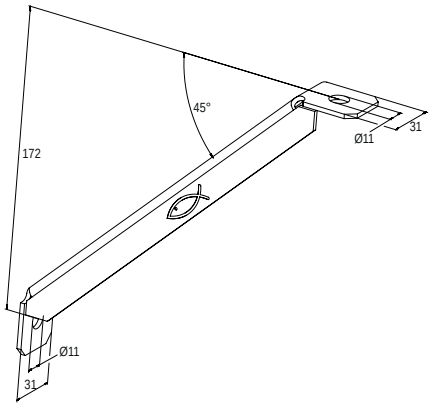

WS 31-45°

Item	Art.-No.	Eye-Ø D [mm]	Sales unit [pcs]
WS 31-45°	**538749**	11	10

LOADS

Item	Art.-No.	Max. recommended static load load case 1a [kN]	Max. recommended static load load case 2a [kN]	Max. recommended static load load case 3a [kN]
ALK 17-200	**538738**	1.03	1.03	1.03
ALK 17-300	**538739**	1.52	0.45	1.52
ALK 30-200	**538740**	2.52	1.40	2.52
ALK 30-300	**538741**	1.78	0.89	1.78
ALK 30-450	**538742**	1.16	0.47	1.16
ALK 37-300	**538743**	1.78	0.89	1.78
ALK 37-450	**538744**	1.16	0.59	1.16
ALK 37-600	**538745**	0.89	0.45	0.89

Note: Loads are valid for fixing to wall with adequate carrying capacity. Fixing of the cantilever arm and the angle brace to the wall by anchor (e.g. FAZ II, FBS 8). Fixing of the angle brace to the cantilever profile by FSM Clix P 10, tightening torque 12 Nm. Fixing of the angle brace to the long slot of the cantilever profile by screw and nut M10, tightening torque 20 Nm.

Load case 1a

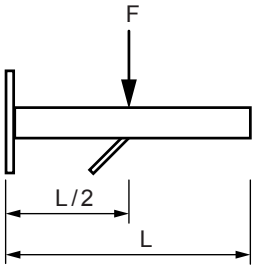

Load case 2a

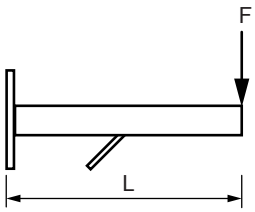

Load case 3a

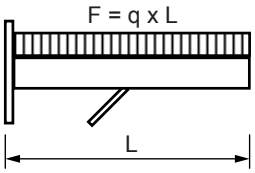

Construction element - Channel connector SV 31

Channel extension with channel connector

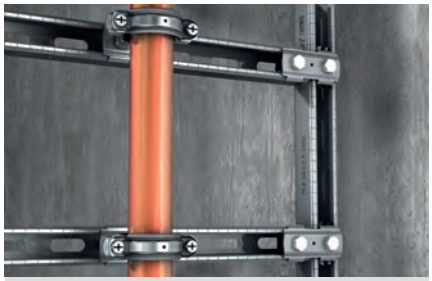

Vertical installation

APPLICATIONS

- With the channel connector SV 31 FLS channels can be connected in different directions.

ADVANTAGES/BENEFITS

- The special retaining brackets at the SV construction elements enable a form-locking installation longitudinal and transverse to the channel direction to adapt the channel connection effectively
- The standardised long slots of the channel connector enable an exact connection to ALK cantilever arms or FLS channels by using FSM Clix P and a screw

PROPERTIES

- **Material:** steel S235 JR+CR (material no.: 1.0037) acc. to DIN EN 1652
- **Zinc plating:** electro zinc-plated, min. 5 µm acc. DIN EN ISO 4042

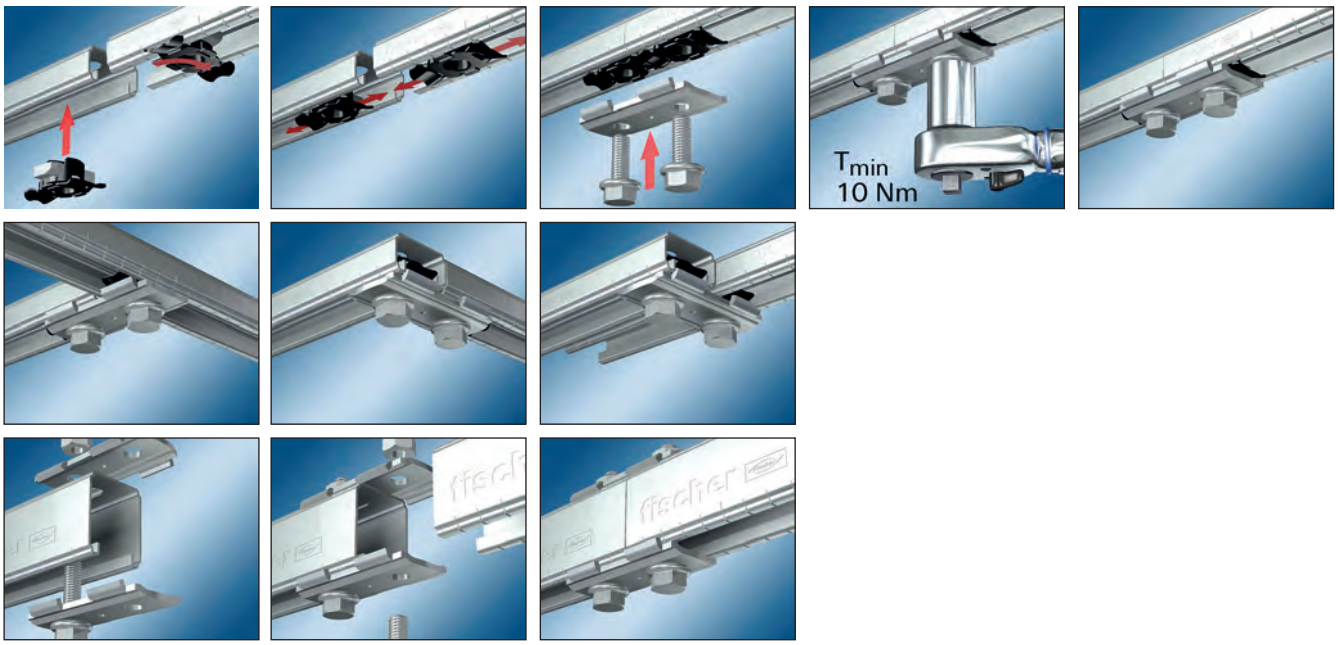

TECHNICAL DATA

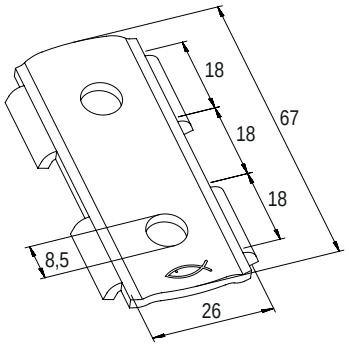

Item	Art.-No.	Hole-Ø D [mm]	Sales unit [pcs]
SV 31	**538641**	8.5	25

LOADS

Item	Art.-No.	Max. recommended shear load V_{rec} [kN]	Tightening torque T_{inst} [Nm]
SV 31	**538641**	1.0	10

The loads are only valid by using FSM Clix P 8.

Channel nut for quick and easy connection of FLS channels

Floor penetration

Channel extension with channel connector

APPLICATIONS

- FSM Clix P is suitable for interconnecting FLS channels by using connecting elements.

ADVANTAGES/BENEFITS

- The special and disappearing thrust block of the sliding nut Clix P plastic holder enables a connection of connecting elements and channels without plastic interlayer to establish a safe longitudinal metallic connection.
- The especially developed spring leg on the FSM Clix P guarantees the necessary contact pressure of the connector to the channel to help for a secure adjustment during installation.
- The teeth on the sliding nut enable an exact and secure positioning in the FLS channel and ease the installation of connector elements.
- The unique stop element on the FSM Clix P connector guarantees the accurate 90°-turn of the connectors in the channel to ensure a save and precise installation.

CERTIFICATES

Fire resistance classification R 120 according DIN EN 1363-1

MLAR R 30

PROPERTIES

- **Material channel nut:** steel S420MC (material no.: 1.0980) acc. DIN EN 10149-2
- **Material plasic cage:** polypropylene PP, item number 11400, Color black
- **Zinc plating:** electro zinc-plated, min. 5 µm acc. DIN EN ISO 4042

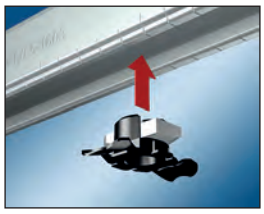

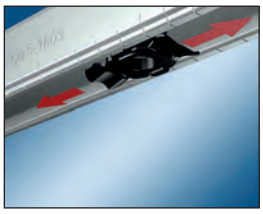

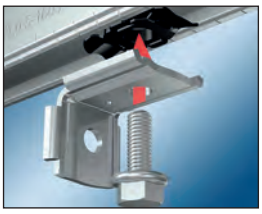

TECHNICAL DATA

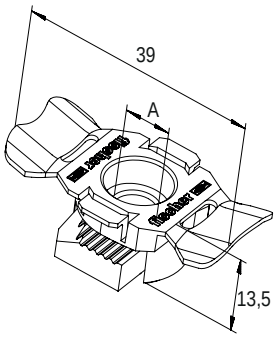

Item	Art.-No.	Thread A	Sales unit [pcs]
FSM Clix P 6	**538643**	M 6	50
FSM Clix P 8	**538647**	M 8	50
FSM Clix P 10	**538649**	M 10	50

LOADS

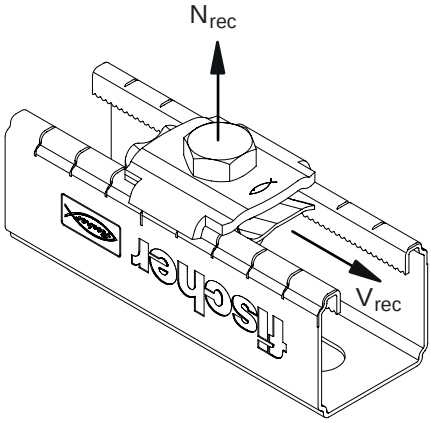

Item	Art.-No.	Max. recommended tension load for FLS 17/1.0 and FLS 30/1.0 N_{rec} [kN]	Max. recommended tension load for FLS 37/1.2 N_{rec} [kN]	Max. recommended shear load V_{rec} [kN]	Tightening torque T_{inst} [Nm]
FSM Clix P 6	**538643**	1.5	2.0	1.0	10
FSM Clix P 8	**538647**	1.5	2.0	1.0	10
FSM Clix P 10	**538649**	1.5	2.0	1.0	10

Channel nut for quick and easy fixing in FLS channels

Pipe fixing with channel

Pipe fixing on frame construction

APPLICATIONS

- FSM Clix M is suitable for connecting pipe clamps with a threaded rod to FLS channels.

ADVANTAGES/BENEFITS

- The unique spring leg at the FSM Clix M guarantees the necessary contact pressure of the connector to the channel to help for a secure adjustment during installation.
- The teeth on the sliding nut enable an exact and secure positioning in the FLS channel and ease the installation of connector elements.
- The clix-connector element with 90°-turn for connecting enables an easy post-installation in set channels to save time and money.
- The especially developed stop element on the FSM Clix M connector guarantees the accurate 90°-turn of the connectors in the channel to ensure a safe and precise installation.

CERTIFICATES

Fire resistance classification R 120 according DIN EN 1363-1

MLAR R 30

PROPERTIES

- **Material channel nut:** steel S420MC (material no.: 1.0980) acc. DIN EN 10149-2
- **Material cover plate:** steel S235JR+CR (material no.: 1.0037) acc. DIN 1652
- **Material plasic cage:** polypropylene PP, item number 11400, Color black
- **Zinc plating:** electro zinc-plated, min. 5 µm acc. DIN EN ISO 4042

TECHNICAL DATA

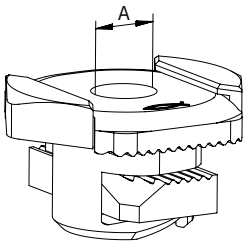

Item	Art.-No.	Thread A	Width across nut ⬡ SW [mm]	Sales unit [pcs]
FSM Clix M 6	**538650**	M 6	10	50
FSM Clix M 8	**538651**	M 8	13	50
FSM Clix M 10	**538652**	M 10	17	50

LOADS

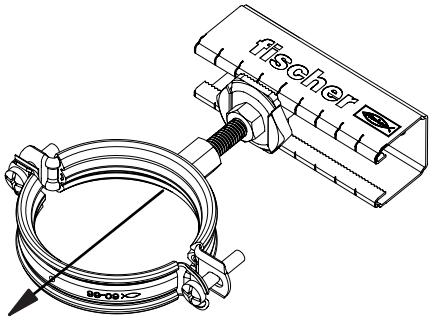

Item	Art.-No.	Max. recommended tension load for FLS 17/1.0 and FLS 30/1.0 N_{rec} [kN]	Max. recommended tension load for FLS 37/1.2 N_{rec} [kN]	Tightening torque T_{inst} [Nm]
FSM Clix M 6	**538650**	1.5	2.0	8
FSM Clix M 8	**538651**	1.5	2.0	8
FSM Clix M 10	**538652**	1.5	2.0	8

Hammer-head bolt for quick and easy fixing in FLS channels

Pipe fixing at the wall

Light pipe fixing

APPLICATIONS

- FHS Clix is suitable for connecting pipe clamps with the channel.

ADVANTAGES/BENEFITS

- The special spring leg at the FHS Clix guarantees the necessary contact pressure of the connector to the channel to help for a secure adjustment during installation.
- The teeth on the sliding nut enable an exact and secure positioning in the FLS channel and ease the installation of connector elements.
- The clix-connector element with 90°-turn for connecting enables an easy post-installation in set channels to save time and money.
- The especially developed stop element on the FHS Clix connector guaraneies the accurate 90°-turn of the connectors in the channel to ensure a safe and precise installation.

CERTIFICATES

Fire resistance classification R120 according DIN EN 1363-1

MLAR R 30

PROPERTIES

- **Material channel nut:** steel S420MC (material no.: 1.0980) acc. DIN EN 10149-2
- **Material cover plate:** steel S235JR+CR (material no.: 1.0037) acc. DIN 1652
- **Material threaded rod:** steel acc. DIN 976-2, min. 4.6 (DIN EN ISO 898-1)
- **Material hexagonal nut:** steel acc. DIN 934-4 min. 4.8 (DIN EN ISO 898-2 table 4 stability)
- **Material plasic cage:** polypropylene PP, item number 11400, Color black
- **Zinc plating:** electro zinc-plated, min. 5 µm acc. DIN EN ISO 4042

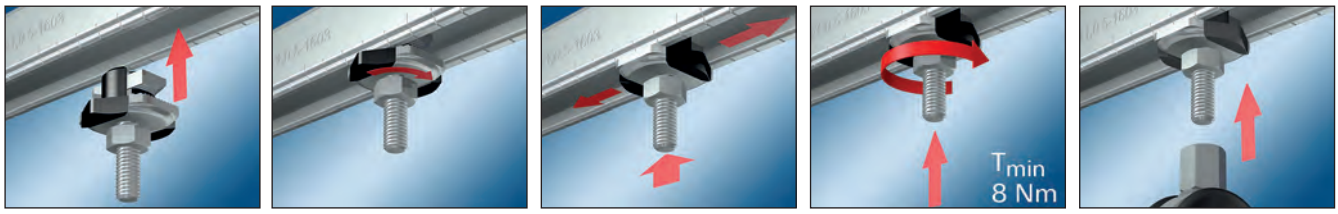

TECHNICAL DATA

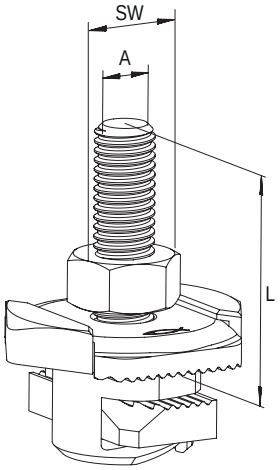

Item	Art.-No.	Thread A	Length [mm]	Width across nut ⬡ SW [mm]	Sales unit [pcs]
FHS CLIX 8 x 30	**538653**	M 8	30	13	100
FHS CLIX 8 x 40	**538654**	M 8	40	13	100
FHS CLIX 8 x 60	**538655**	M 8	60	13	100
FHS CLIX 8 x 80	**538656**	M 8	80	13	50
FHS CLIX 8 x 100	**538657**	M 8	100	13	50
FHS CLIX 8 x 140	**545834**	M 8	140	13	50
FHS CLIX 8 x 190	**545835**	M 8	190	13	50
FHS CLIX 10 x 30	**538658**	M 10	30	17	100
FHS CLIX 10 x 40	**538659**	M 10	40	17	100
FHS CLIX 10 x 60	**538660**	M 10	60	17	50
FHS CLIX 10 x 80	**545836**	M 10	80	17	50
FHS CLIX 10 x 100	**538661**	M 10	100	17	50

LOADS

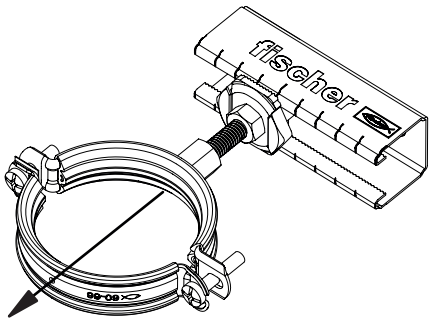

Item	Art.-No.	Max. recommended tension load for FLS 17/1.0 and FLS 30/1.0 N_{rec} [kN]	Max. recommended tension load for FLS 37/1.2 N_{rec} [kN]	Tightening torque T_{inst} [Nm]
FHS CLIX 8 x 30	**538653**	1.5	2.0	8
FHS CLIX 8 x 40	**538654**	1.5	2.0	8
FHS CLIX 8 x 60	**538655**	1.5	2.0	8
FHS CLIX 8 x 80	**538656**	1.5	2.0	8
FHS CLIX 8 x 100	**538657**	1.5	2.0	8
FHS CLIX 10 x 30	**538658**	1.5	2.0	8
FHS CLIX 10 x 40	**538659**	1.5	2.0	8
FHS CLIX 10 x 60	**538660**	1.5	2.0	8
FHS CLIX 10 x 100	**538661**	1.5	2.0	8

The pre-assembled saddle flange SF Clix 31

Channel installation at the wall

Cantilever construction with channel

APPLICATIONS

- Element for the stable construction of connections between channels and building structures.

ADVANTAGES/BENEFITS

- Pre-assembled accessories like SF Clix bring the number of articles for a connection down and guarantee a time-saving installation.
- The pre-assembled connector of the SF Clix secures the installation position due to the unique thrust block and guarantees a safe and fast installation.
- The special spring leg at pre-assembled connector guarantees the necessary contact pressure of the connector to the channel to help for a secure adjustment during installation.
- The perfect-fit saddle of the SF allows an simple installation by inserting the channel.
- The saddle flange's stable design offers a secure hold for a load-bearing construction.

PROPERTIES

- **Material saddle:** steel E295 (material no.: 1.0050) acc. DIN EN 10025-2
- **Material channel nut:** steel S420MC (material no.: 1.0980) acc. DIN EN 10149-2
- **Material cover plate:** steel S235JR+CR (material no.: 1.0037) acc. DIN 1652
- **Material hexagonal screw:** steel min. 4.6 (DIN EN ISO 898-1)
- **Material plasic cage:** polypropylene PP, item number 11400, Color black
- **Zinc plating:** electro zinc-plated, min. 5 µm, hexagonal screw min. 3 µm acc. DIN EN ISO 4042

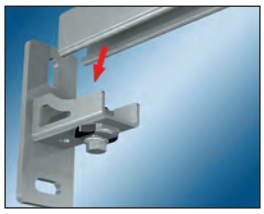

TECHNICAL DATA

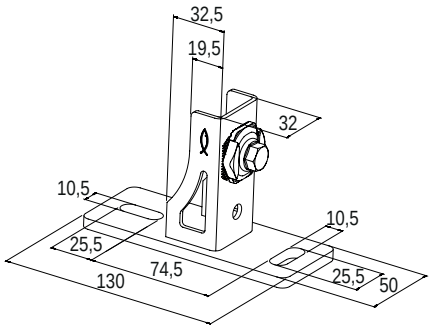

Item	Art.-No.	Thread A	Width across nut ⬡ SW [mm]	Sales unit [pcs]
SF Clix 31	**538665**	M 8	13	10

LOADS

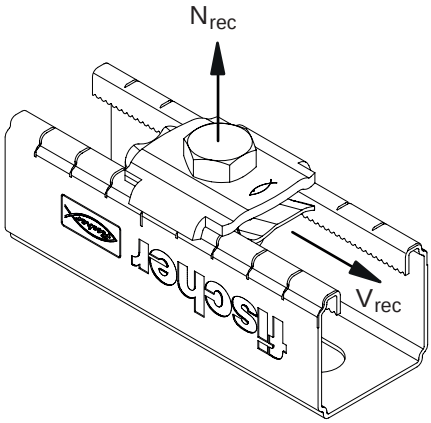

Item	Art.-No.	Max. recommended tension load for FLS 17/1.0 and FLS 30/1.0 N_{rec} [kN]	Max. recommended tension load for FLS 37/1.2 N_{rec} [kN]	Max. recommended shear load V_{rec} [kN]	Tightening torque T_{inst} [Nm]
SF Clix 31	**538665**	1.5	2.0	1.0	10

Max. recommended shear load: By using additional screw M8 the shear load for vertical installation can be doubled.

The pre-assembled angle bracket MW Clix 90°

Cantilever construction with channel

Pipe fixing on frame construction

APPLICATIONS

- Element for the stable construction of angle connections with FLS channels.

ADVANTAGES/BENEFITS

- Pre-assembled accessories like SF Clix bring the number of articles for a connection down and guarantee a time-saving installation.
- The pre-assembled connector of the MW Clix secures the installation position due to the unique thrust block and guarantees a safe and fast installation.
- The especially developed spring leg at the pre-assembled connector guarantees the necessary contact pressure of the connector to the channel to help for a secure adjustment during installation.
- The form-locking and accurately fitting angle bracket of the MW clix allows a simple installation of the FLS channel and saves valuable installation time.

PROPERTIES

- **Material angle bracket:** steel S235JR+CR (material no.: 1.0037) acc. DIN 1652
- **Material channel nut:** steel S420MC (material no.: 1.0980) acc. DIN EN 10149-2
- **Material cover plate:** steel S235JR+CR (material no.: 1.0037) acc. DIN 1652
- **Material hexagonal screw:** steel min. 4.6 (DIN EN ISO 898-1)
- **Material plasic cage:** polypropylene PP, item number 11400, Color black
- **Zinc plating:** electro zinc-plated, min. 5 µm, hexagonal screw min. 3 µm acc. DIN EN ISO 4042

TECHNICAL DATA

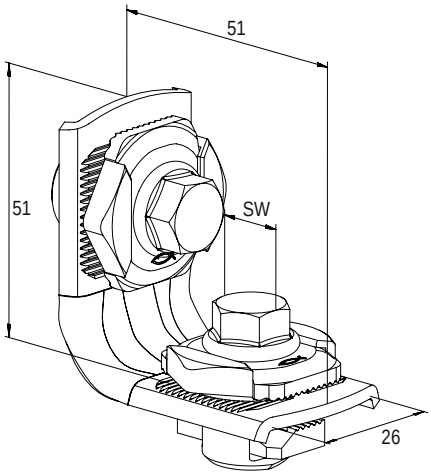

Item	Art.-No.	Thread A	Width across nut ⬡ SW [mm]	Sales unit [pcs]
MW Clix 90°	**538666**	M 8	13	10

LOADS

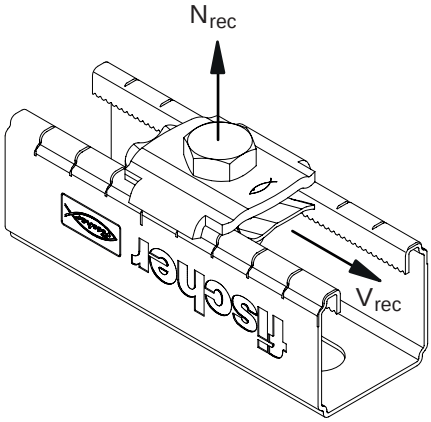

Item	Art.-No.	Max. recommended tension load for FLS 17/1.0 and FLS 30/1.0 N_{rec} [kN]	Max. recommended tension load for FLS 37/1.2 N_{rec} [kN]	Max. recommended shear load V_{rec} [kN]	Tightening torque T_{inst} [Nm]
MW Clix 90°	**538666**	1.5	2.0	1.0	10

Construction element – Angle bracket MW 90° and MWU 90°

Floor penetration

Pipe fixing in a corridor

APPLICATIONS

- Connecting elements for the arrangement of simple channel constructions with the sliding channel nut FSM Clix P.

ADVANTAGES/BENEFITS

- The individual developed retaining brackets at the MW 90° angle bracket enable a form-locking installation longitudinal and transverse to the channel direction to adapt the channel connection effectively.
- The long slot on flat wing of the MWU 90° angle bracket enables a direct connection to the substrate for space-saving fixation.
- The standardised holes in the angle brackets enable an exact connection to the FLS channels by using FSM Clix P and a screw.

PROPERTIES

- **Material:** steel S235 JR+CR (material no.: 1.0037) acc. to DIN EN 1652
- **Zinc plating:** electro zinc-plated, min. 5 µm acc. DIN EN ISO 4042

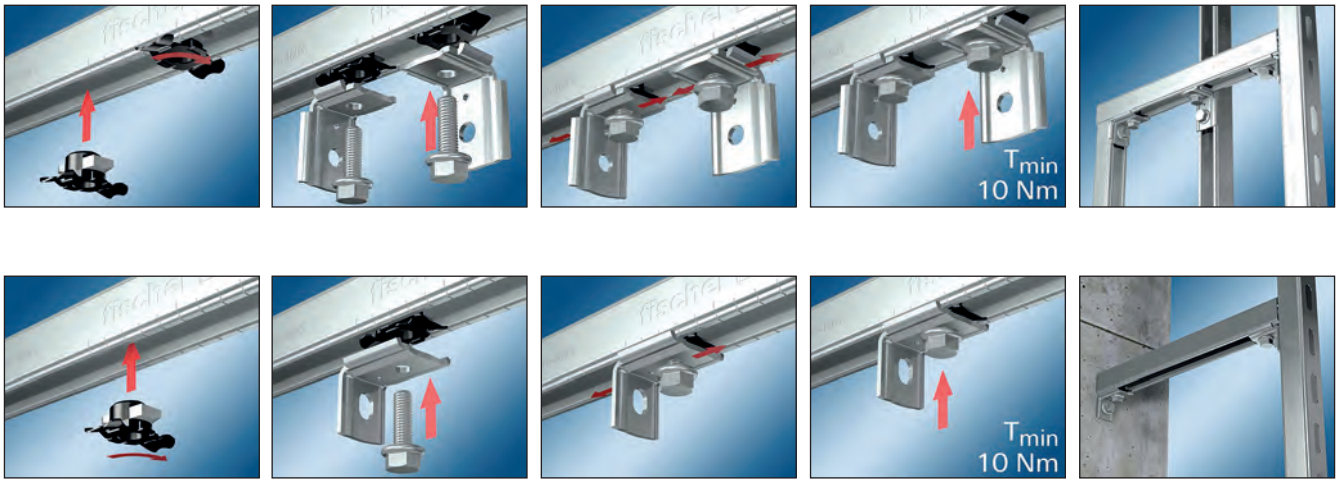

TECHNICAL DATA

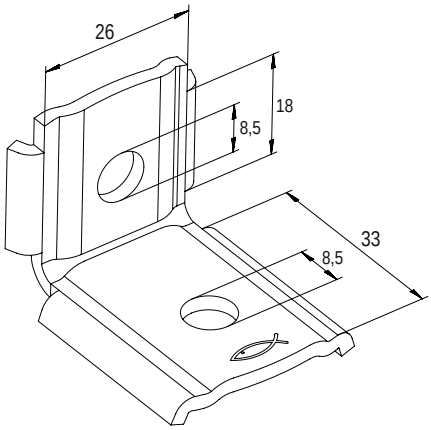

MW 90°

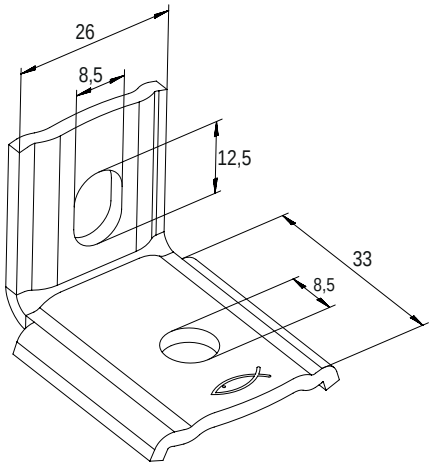

MWU 90°

Item	Art.-No.	Hole-Ø D [mm]	Sales unit [pcs]
MW 90°	**538668**	8.5	50
MWU 90°	**538667**	8.5	25

LOADS

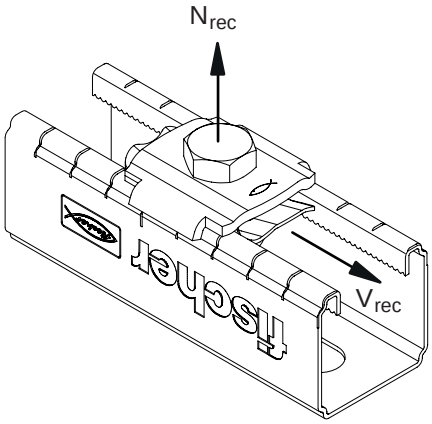

Item	Art.-No.	Max. recommended tension load for FLS 17/1.0 and FLS 30/1.0 N_{rec} [kN]	Max. recommended tension load for FLS 37/1.2 N_{rec} [kN]	Max. recommended shear load V_{rec} [kN]	Tightening torque T_{inst} [Nm]
MW 90°	**538668**	1.5	2.0	1.0	10
MWU 90°	**538667**	1.5	2.0	1.0	10

The loads are only valid by using FSM Clix P 8.

Connector - Channel washer HK 31

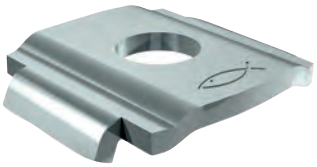

Pipe fixing with channel

Horicontal pipe fixing

APPLICATIONS

- The Channel washer HK 31 is used for stable connections and to strengthen the profile for a fixing to the substrate.

ADVANTAGES/BENEFITS

- The special retaining brackets at the SV connecting elements enable a form-locking installation longitudinal and transverse to the channel direction to adapt the channel connection effectively.
- The standardised slots of the Channel washer enable an exact push-through connection of FLS mounting channels easy and fast.

CERTIFICATES

Fire resistance classification R 120 according DIN EN 1363-1

MLAR R 30

PROPERTIES

- **Material:** steel S235 JR+CR (material no.: 1.0037) acc. to DIN EN 1652
- **Zinc plating:** electro zinc-plated, min. 5 µm acc. DIN EN ISO 4042

TECHNICAL DATA

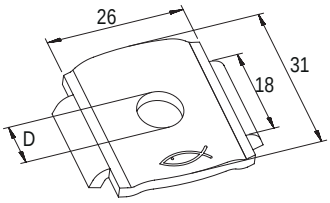

Item	Art.-No.	Hole-Ø D [mm]	Sales unit [pcs]
HK 31 8,5	**538663**	8.5	50
HK 31 10,5	**538664**	10.5	50

Clamping bracket for the fixing of channels to steel girders

Channel fixing to steel beam

APPLICATIONS

- Fixing of FLS channels to steel girders, required are two beam clamps per fixing.

ADVANTAGES/BENEFITS

- The design of the bean clamp allows for fixing without drilling or welding.
- The various lengths of the bean clamp sides allows for fixing on all standard steel beams.
- The shape of the bean clamp guarantees the simple adjustment of the channel connection.

PROPERTIES

- **Material U-bolt pipe hanger:** steel S235 JR (material no.: 1.0037) acc. DIN EN 10025-2
- **Material plate:** steel E295 (material no.: 1.0050) acc. DIN EN 10025-2
- **Material hexagon nut:** steel resistance class 8
- **Zinc plating:** electro zinc-plated, min. 5 µm acc. DIN EN ISO 4042

TECHNICAL DATA

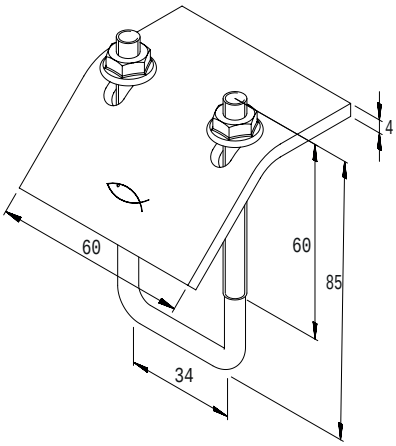

Item	Art.-No.	Thread A	Width across nut ⬡ SW [mm]	Sales unit [pcs]
TKR 31	**538751**	M 6	10	25

LOADS

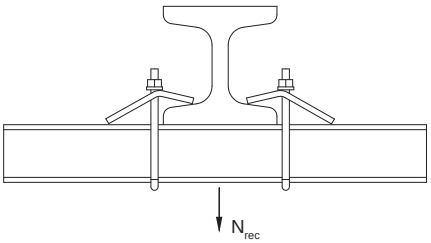

Item	Art.-No.	Max. recom. static load (centr. tension) $N_{recom.}$ [kN]	Tightening torque T_{inst} [Nm]
TKR 31	**538751**	2.80	5

fischer
innovative solutions

2c Channel system FUS

	Page
CHANNELS	
Channel FUS	90
CANTILEVER	
Cantilever arm FCA	99
Large cantilever arm FCAM	103
Cover cap FEC	104
CONNECTORS	
Push-through connector PFCN 41	105
Connector FCN Clix P and FCN Clix M	117
T-head bolt FHS Clix S	119
Channel nut FCSN	121
Channel nut FCN	123
Channel washer HK 41	124

	Page
CONSTRUCTION ELEMENTS	
Channel connector FUF OC and PFUF OC	96
Channel connector FDCC	97
Saddle flange PSF	107
Universal bracket PUWS	108
Angle bracket PWK	109
Variable bracket PVB	110
Bracing elements PSAE	111
Bracket PFFF	113
Bracket PFAF	114
Bracket PFUF	115
Bracket PFUF D	116

	Page
Saddle flange SF	125
Mounting bracket UWS	126
Mounting bracket FAF	135
Flanges FZF	136
Bracket FFF	134
Variable bracket VB	131
Threaded rod bracket FSB 45°	132
Universal mounting UHRS	129
Universal hinge FUH	130
Beam clamp TKR	133

The universal and complete mounting channel system for a wide range of applications

3D-frame constructions

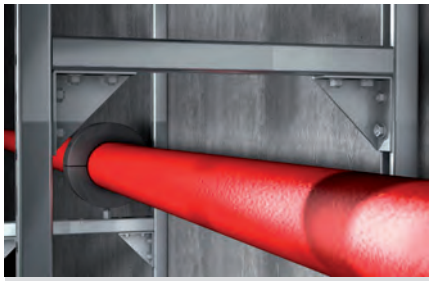

Solid frame construction

APPLICATIONS

- Secure horizontal and vertical installations
- Fast and efficient fixing of pipelines and supporting structures

ADVANTAGES/BENEFITS

- The fire inspection report in line with MLAR/EN13501 guarantees independently tested functional safety.
- The basic channel geometry allows the usage of the complete extensive range of accessories.
- The stamped teeth in the channel give the sliding nuts a secure hold for high shear loads, e.g. for vertical installation.
- Different channel wall thicknesses allow economical choices for installation.
- The scale on the mounting channels simplifies the cutting and positioning of the fixtures during the installation.

CERTIFICATES

PROPERTIES

- **Material:** pre-galvanised steel S-250-GD+Z275 (material no.: 1.0242) acc. to DIN EN 10346

SEE ALSO

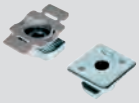

FCN Clix P/M
see page 117

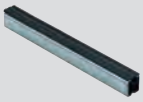

EMS
see page 168

TECHNICAL DATA

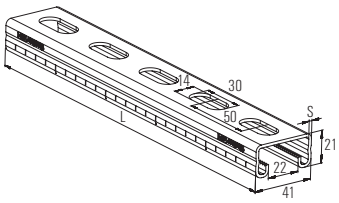

FUS 21

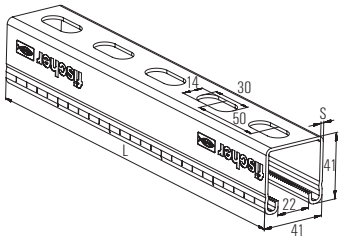

FUS 41

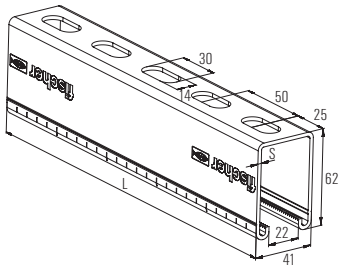

FUS 62

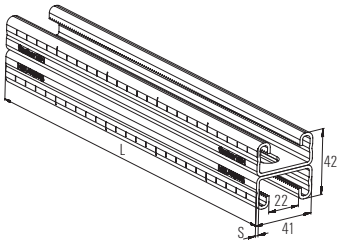

FUS 21D

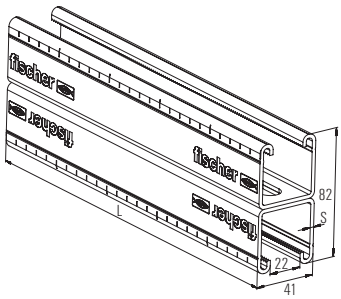

FUS 41D

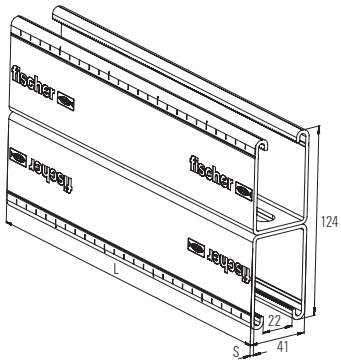

FUS 62D

Item	Art.-No.	Fire test report	Length L [mm]	Thickness S [mm]	Sales unit [pcs]
FUS 21/1,5 - 2 m	**545117**	–	2000	1.5	1
FUS 21/1,5 - 3 m	**545118**	–	3000	1.5	1
FUS 21/1,5 - 6 m	**545119**	–	6000	1.5	1
FUS 21/2,0 - 2 m	**040391**	–	2000	2	1
FUS 21/2,0 - 3 m	**097660**	–	3000	2	1
FUS 21/2,0 - 6 m	**097661**	–	6000	2	1
FUS 21/2,5 - 2 m	**092867**	–	2000	2.5	1
FUS 21/2,5 - 3 m	**077349**	–	3000	2.5	1
FUS 21/2,5 - 6 m	**077541**	–	6000	2.5	1
FUS 41/1,5 - 2 m	**545120**	–	2000	1.5	1
FUS 41/1,5 - 3 m	**545126**	–	3000	1.5	1
FUS 41/1,5 - 6 m	**545127**	–	6000	1.5	1
FUS 41/2,0 - 2 m	**040390**	–	2000	2	1
FUS 41/2,0 - 3 m	**097658**	–	3000	2	1
FUS 41/2,0 - 6 m	**097659**	–	6000	2	1
FUS 41/2,5 - 2 m	**092295**	X	2000	2.5	1
FUS 41/2,5 - 3 m	**077347**	X	3000	2.5	1
FUS 41/2,5 - 6 m	**077537**	X	6000	2.5	1
FUS 62/2,5 - 6 m	**504457**	X	6000	2.5	1
FUS 21D/2,0 - 3 m	**504458**	–	3000	2	1
FUS 21D/2,0 - 6 m	**535531**	–	6000	2	1
FUS 41D/2,5 - 6 m	**504459**	–	6000	2.5	1
FUS 62D/2,5 - 6 m	**504460**	–	6000	2.5	1

LOADS

Item	Art.-No.	Profil weight [kg/m]	Profile cross section [cm²]	Moment of inertia I_y [cm4]	Moment of inertia I_z [cm4]	Section modulus W_y [cm³]	Section modulus W_z [cm³]	Max. recommended static load for 1m length F_{rec} [kN]	Max. recommended static load for 2m length F_{rec} [kN]	Max. recommended static load for 3m length F_{rec} [kN]
FUS 21/1,5 - 2 m	**545117**	1.20	1.35	0.8	3.69	0.75	1.80	0.41	0.10	–
FUS 21/1,5 - 3 m	**545118**	1.20	1.35	0.8	3.69	0.75	1.80	0.41	0.10	–
FUS 21/1,5 - 6 m	**545119**	1.20	1.35	0.8	3.69	0.75	1.80	0.41	0.10	–
FUS 21/2,0 - 2 m	**040391**	1.44	1.72	0.97	4.66	0.89	2.27	0.49	0.12	–
FUS 21/2,0 - 3 m	**097660**	1.44	1.72	0.97	4.66	0.89	2.27	0.49	0.12	0.05
FUS 21/2,0 - 6 m	**097661**	1.44	1.72	0.97	4.66	0.89	2.27	0.49	0.12	0.05
FUS 21/2,5 - 2 m	**092867**	1.67	1.99	1.03	5.28	0.93	2.58	0.52	0.13	–
FUS 21/2,5 - 3 m	**077349**	1.67	1.99	1.03	5.28	0.93	2.58	0.52	0.13	0.06
FUS 21/2,5 - 6 m	**077541**	1.67	1.99	1.03	5.28	0.93	2.58	0.52	0.13	0.06
FUS 41/1,5 - 2 m	**545120**	1.80	1.95	4.26	6.03	2.07	2.94	1.56	0.54	–
FUS 41/1,5 - 3 m	**545126**	1.80	1.95	4.26	6.03	2.07	2.94	1.56	0.54	0.24
FUS 41/1,5 - 6 m	**545127**	1.80	1.95	4.26	6.03	2.07	2.94	1.56	0.54	0.24
FUS 41/2,0 - 2 m	**040390**	2.06	2.52	5.33	7.69	2.58	3.75	1.94	0.67	–
FUS 41/2,0 - 3 m	**097658**	2.06	2.52	5.33	7.69	2.58	3.75	1.94	0.67	0.30
FUS 41/2,0 - 6 m	**097659**	2.06	2.52	5.33	7.69	2.58	3.75	1.94	0.67	0.30
FUS 41/2,5 - 2 m	**092295**	2.45	3.00	6.00	8.99	2.85	4.38	2.14	0.76	–
FUS 41/2,5 - 3 m	**077347**	2.45	3.00	6.00	8.99	2.85	4.38	2.14	0.76	0.34
FUS 41/2,5 - 6 m	**077537**	2.45	3.00	6.00	8.99	2.85	4.38	2.14	0.76	0.34
FUS 62/2,5 - 6 m	**504457**	3.27	4.05	17.70	12.90	5.62	6.29	4.22	2.10	0.99
FUS 21D/2,0 - 3 m	**504458**	2.87	3.44	5.49	9.31	2.61	4.54	1.96	0.69	0.31
FUS 21D/2,0 - 6 m	**535531**	2.87	3.44	5.49	9.31	2.61	4.54	1.96	0.69	0.31
FUS 41D/2,5 - 6 m	**504459**	4.89	6.00	35.01	17.90	8.76	8.78	6.58	3.28	1.96
FUS 62D/2,5 - 6 m	**504460**	6.55	8.09	111.00	25.80	17.90	12.58	13.45	6.72	4.47

Note: Loads based on load case 1

Load case 1

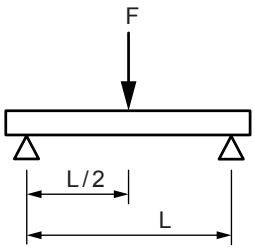

Load case 2

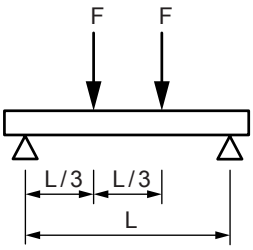

Load case 3

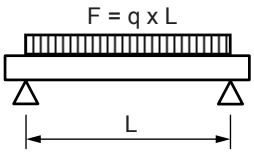

FUS 21 / 1.5

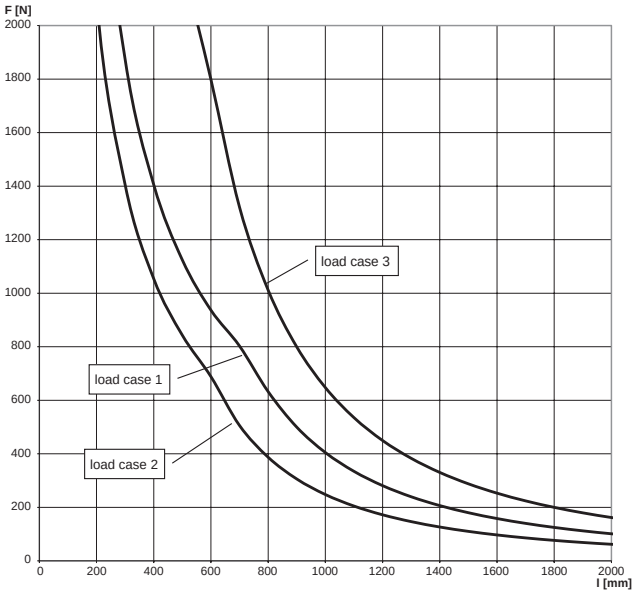

FUS 21 / 2.0

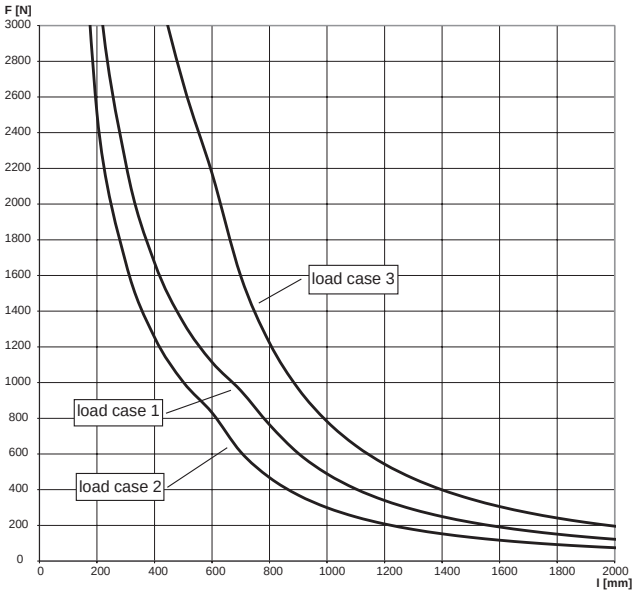

For the load curves, the permissible steel strain $\delta_{adm.}$ = 188 N/mm and the maximum deflection under load L/200 are not exceeded. Fixings and screw fastenings must be calculated accordingly. The increased yield strength is calcuated according DIN EN 1993-1-3:2010-12, sec. 3.2.2.

FUS 21 / 2.5

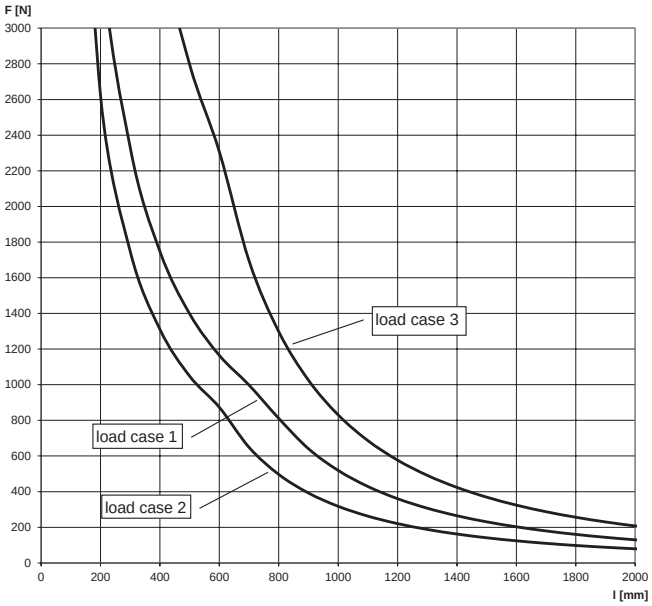

FUS 41 / 1.5

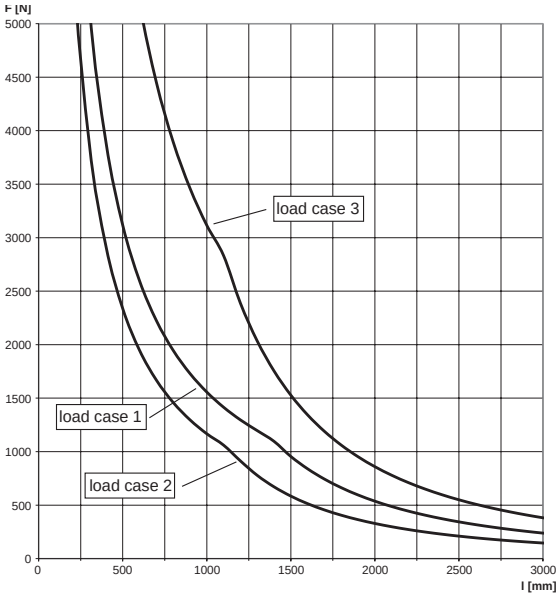

For the load curves, the permissible steel strain $\delta_{adm.}$ = 188 N/mm and the maximum deflection under load L/200 are not exceeded. Fixings and screw fastenings must be calculated accordingly. The increased yield strength is calcuated according DIN EN 1993-1-3:2010-12, sec. 3.2.2.

FUS 41 / 2.0

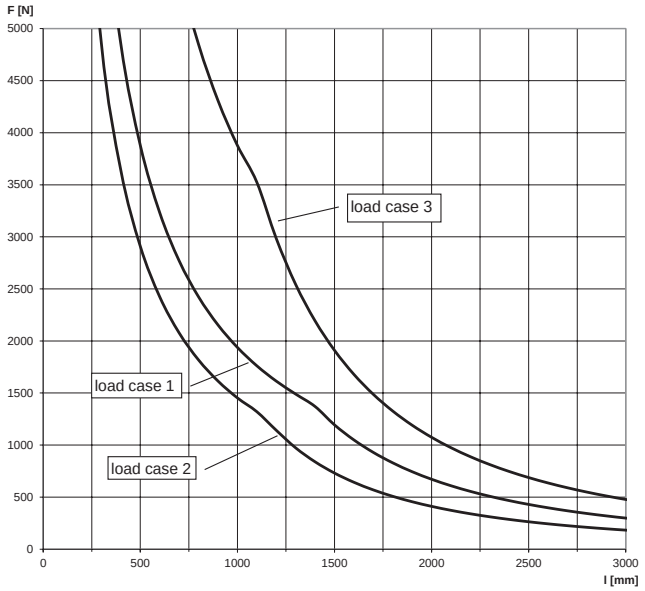

FUS 41 / 2.5

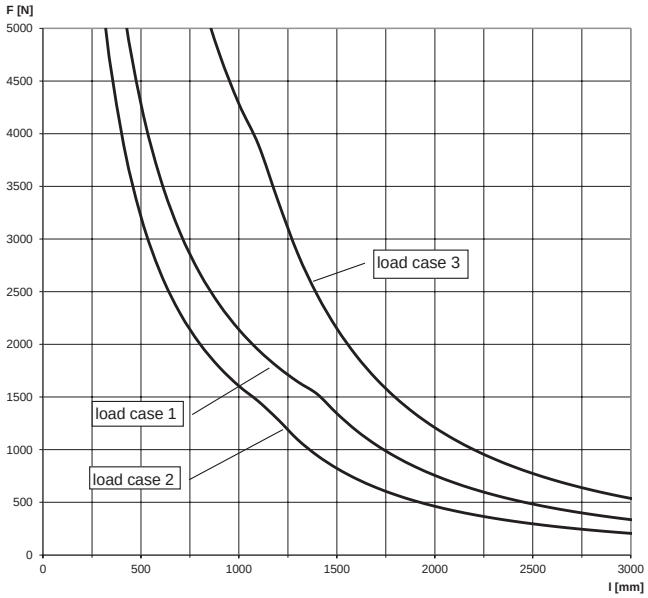

For the load curves, the permissible steel strain $\delta_{adm.}$ = 188 N/mm and the maximum deflection under load L/200 are not exceeded. Fixings and screw fastenings must be calculated accordingly. The increased yield strength is calcuated according DIN EN 1993-1-3:2010-12, sec. 3.2.2.

FUS 62 / 2.5

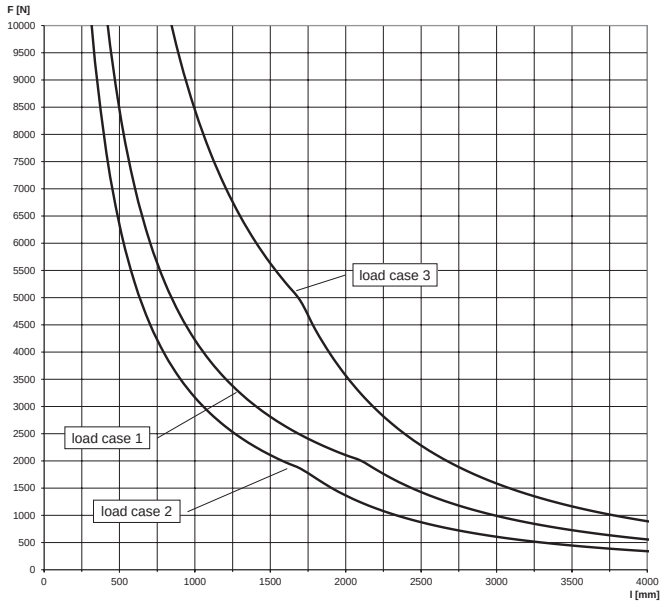

FUS 21D / 2.0

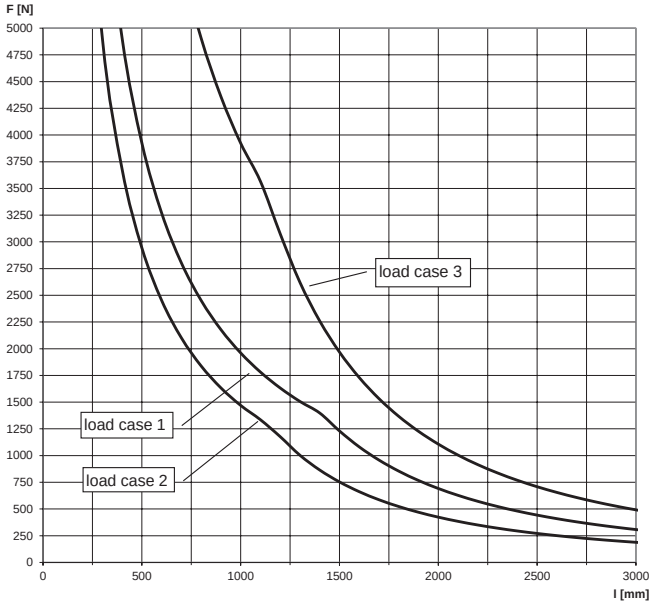

For the load curves, the permissible steel strain $\delta_{adm.}$ = 188 N/mm and the maximum deflection under load L/200 are not exceeded. Fixings and screw fastenings must be calculated accordingly. The increased yield strength is calcuated according DIN EN 1993-1-3:2010-12, sec. 3.2.2.

FUS 41D / 2.5

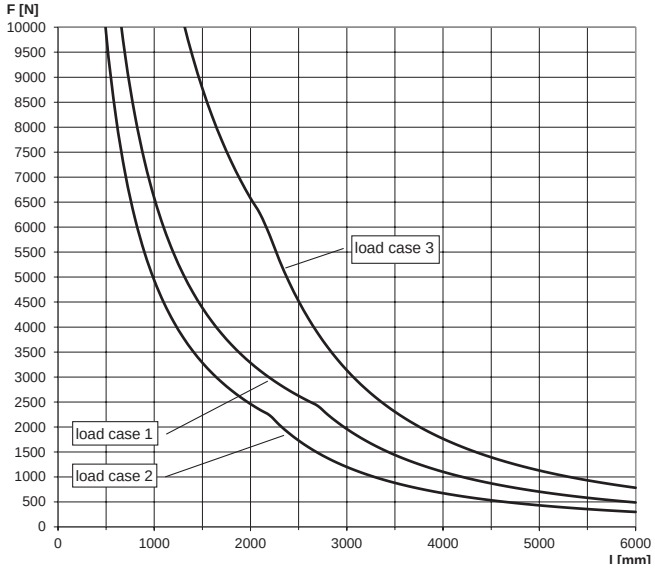

FUS 62D / 2.5

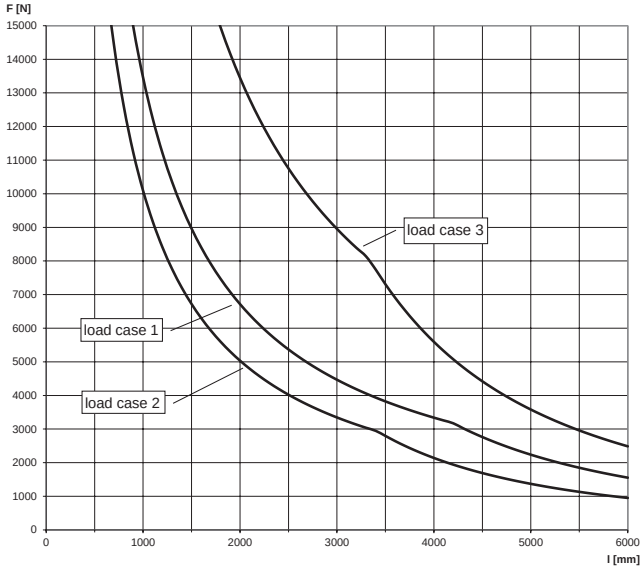

For the load curves, the permissible steel strain $\delta_{adm.}$ = 188 N/mm and the maximum deflection under load L/200 are not exceeded. Fixings and screw fastenings must be calculated accordingly. The increased yield strength is calcuated according DIN EN 1993-1-3:2010-12, sec. 3.2.2.

Construction element - Channel connector FUF OC and PFUF OC

Connector for installation grid

Longitudal channel connection

APPLICATIONS

- Connection and precise alignment of channel

ADVANTAGES/BENEFITS

- The FUF OC connector in combination with FCN Clix P allows a simple and time-saving installation.
- The PFUF OC connector in combination with PFCN allows a simple and time-saving installation.

PROPERTIES

- **Material FUF OC:** steel S235 JR (material no. 1.0037) acc. to DIN EN 10025
- **Zinc plating FUF OC:** electro zinc-plated, min. 5 µm
- **Material PFUF OC:** steel DD11 (material no. 1.0332) acc. to DIN EN 10111
- **Zinc plating PFUF OC:** electro zinc-plated acc. DIN 50979, min. 8 µm

TECHNICAL DATA

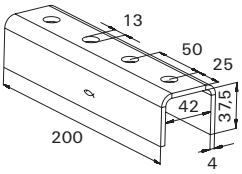

FUF OC 41

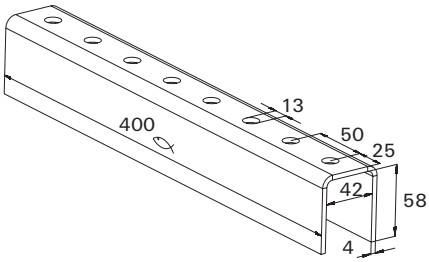

FUF OC 62

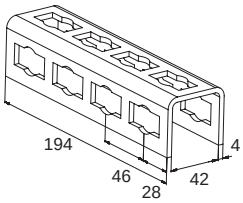

PFUF OC

Item	Art.-No.	Length l [mm]	Sales unit [pcs]		
FUF OC 41	**504517**	200	20		
FUF OC 62	**504518**	400	10		
PFUF OC	**533743**	194	6		

Channel connector for easy preparation of FUS double channels

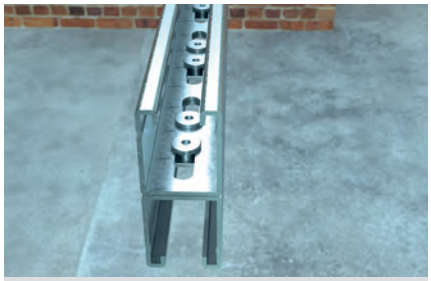

FUS double channel with channel connector

APPLICATIONS

- Easy construction of double channels made from the FUS channel assortment.
- Suitable for FUS channels FUS 41 and FUS 62 with thickness 2,0 and 2,5 mm.
- The connection of two single channels is made with the channel connector inside the channel slots.
- Each double channel has to be equipped with an FDCC at both ends and additional FDCCs in the given installation distance as per load chart.

ADVANTAGES/BENEFITS

- Easy connection of single channels back to back to built double channels.
- Simple solution to create individual double channels on job site.
- For dry inside environment.

PROPERTIES

- **Material base plate:** JIS G3131-SPHE (similar to DD13 according to DIN EN 10111, material no.: 1.0335)
- **Material screw:** steel grade 8.8
- **Zinc plating:** electro zinc-plated, min. 5 µm

TECHNICAL DATA

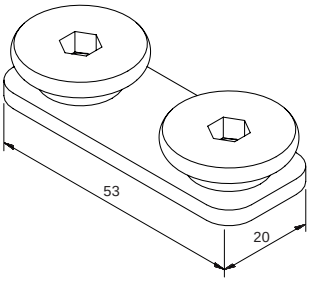

Item	Art.-No.	Thread A	Drive	Tightening torque T_{inst} [Nm]	Sales unit [pcs]
FDCC	**546148**	M 10	Hexagon socket 5 mm	25	100

FUS 41D / 2.0 - 2.5

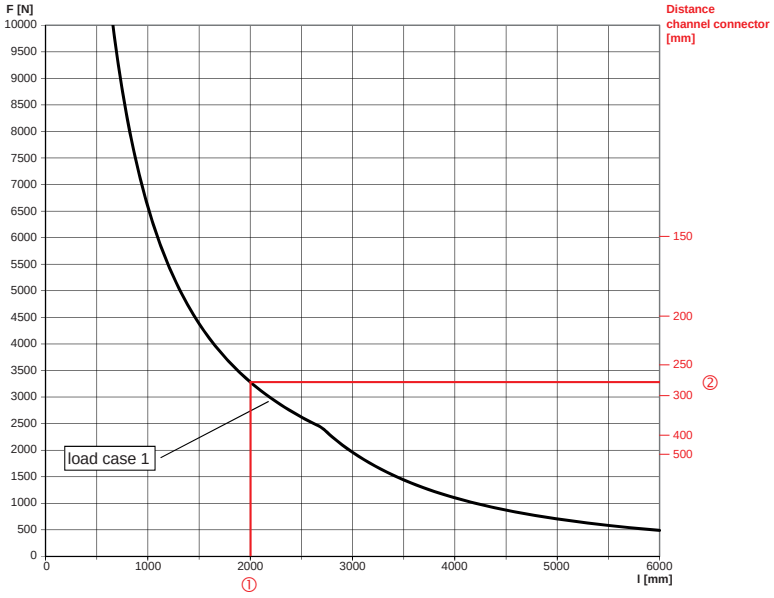

① Length of channel, i.e. 2000 mm for loadcase 1 (single load centric)

② Distance of channel connector (for intermediate values use the lower value, i.e. 250 mm)

FUS 62D / 2.5

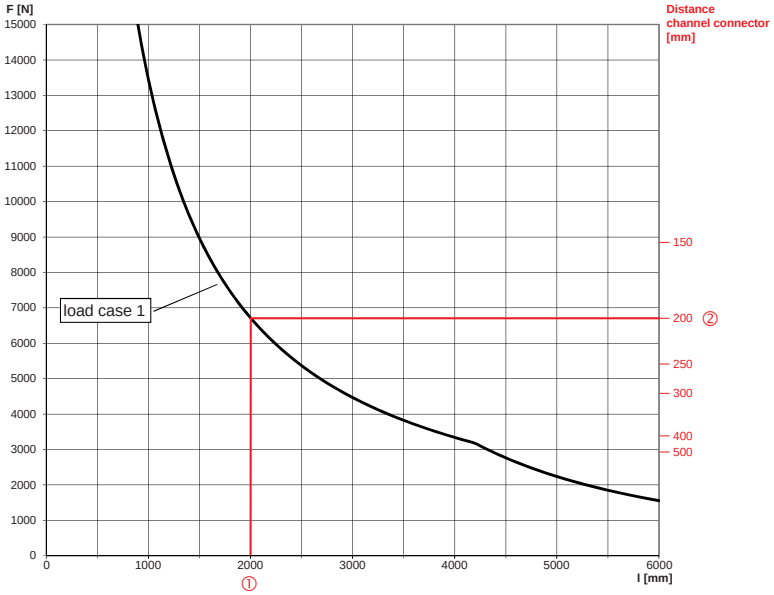

① Length of channel, i.e. 2000 mm for loadcase 1 (single load centric)

② Distance of channel connector (for intermediate values use the lower value, i.e. 250 mm)

Load case 1

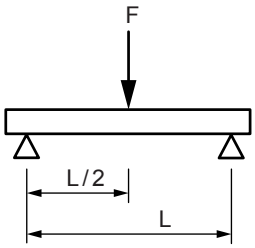

FUS profiles with welded base plate for direct mounting on the base material

Refrigerant pipe clamp on sliding element

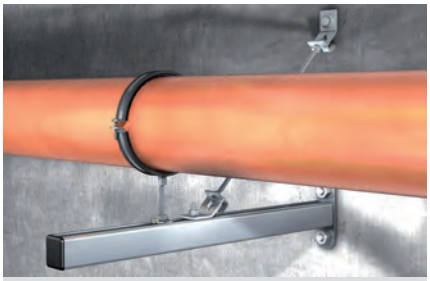

Heavy pipe on cantilever

APPLICATIONS

- Quick and easy installation of pipelines (e.g. along the wall)

ADVANTAGES/BENEFITS

- The fire inspection report in line with MLAR/EN13501 guarantees independently tested functional safety.
- The graduated range of lengths allows for an ideal adaptation to the application.
- The arm's solid base plate offers a secure hold for load-bearing construction.
- The base plate's long slots, which are at 90° to one another, allow the arm to be easily aligned.
- The stamped teeth in the channel gives the sliding nuts a secure hold for high shear loads, e.g. for vertical installation.

CERTIFICATES

Fire resistance classification R 120 according DIN EN 1363-1

MLAR R 30

PROPERTIES

- **Material:** steel S235 JR (material no.: 1.0037) acc. to DIN EN 10025
- **Zinc plating:** electro zinc-plated, min. 8 µm

TECHNICAL DATA

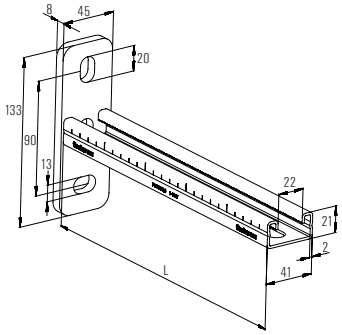

FCA 21

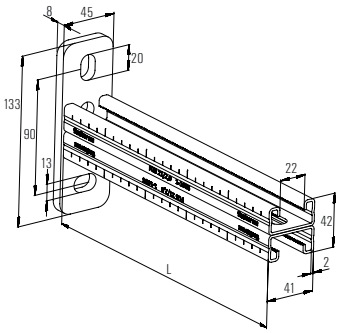

FCA 21D

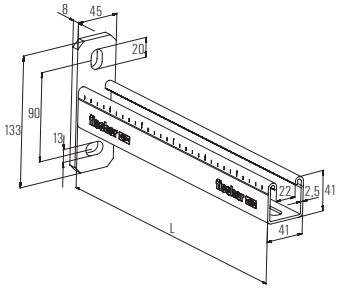

FCA 41

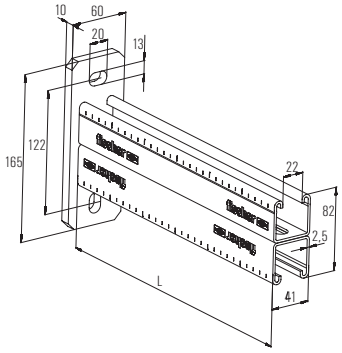

FCA 41D

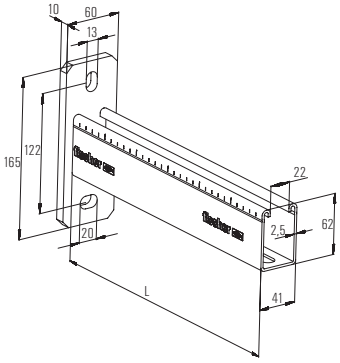

FCA 62

Item	Art.-No.	Fire test report	Profile	Length L [mm]	Sales unit [pcs]
FCA 21 - 200	**537207**	–	21/2,0	200	1
FCA 21 - 300	**537208**	–	21/2,0	300	1
FCA 21 - 450	**537209**	–	21/2,0	450	1
FCA 41 - 300	**077359**	X	41/2,5	300	1
FCA 41 - 450	**077361**	X	41/2,5	450	1
FCA 41 - 600	**077363**	X	41/2,5	600	1
FCA 41 - 750	**077365**	X	41/2,5	750	1
FCA 62 - 1000	**504315**	X	62/2,5	1000	1
FCA 21D - 300	**536978**	–	21D/2.0	300	1
FCA 21D - 450	**536979**	–	21D/2.0	450	1
FCA 21D - 600	**536980**	–	21D/2.0	600	1
FCA 41D - 750	**504317**	–	41D/2,5	750	1
FCA 41D - 1000	**504319**	–	41D/2,5	1000	1

LOADS

Item	Art.-No.	Max. recommended static load load case 1 F_{rec} [kN]	Max. recommended static load load case 2 F_{rec} [kN]	Max. recommended static load load case 3 F_{rec} [kN]
FCA 21 - 200	**537207**	1.43	0.72	1.43
FCA 21 - 300	**537208**	0.95	0.45	0.95
FCA 21 - 450	**537209**	0.65	0.21	0.65
FCA 41 - 300	**077359**	1.8	0.9	1.8
FCA 41 - 450	**077361**	1.2	0.6	1.2
FCA 41 - 600	**077363**	0.9	0.45	0.9
FCA 41 - 750	**077365**	0.72	0.36	0.72
FCA 62 - 1000	**504315**	1.25	0.62	1.25
FCA 21D - 300	**536978**	1.83	0.92	1.83
FCA 21D - 450	**536979**	1.24	0.62	1.24
FCA 21D - 600	**536980**	0.92	0.46	0.92
FCA 41D - 750	**504317**	2.5	1.25	2.5
FCA 41D - 1000	**504319**	1.9	0.93	1.9

Load case 1

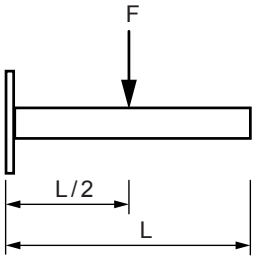

Load case 2

Load case 3

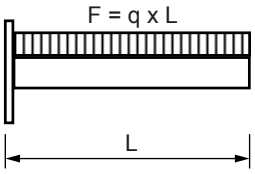

FCA 21

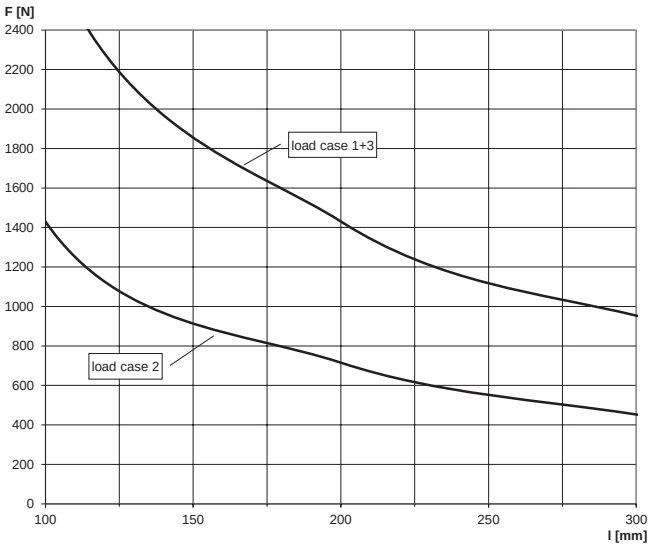

FCA 41

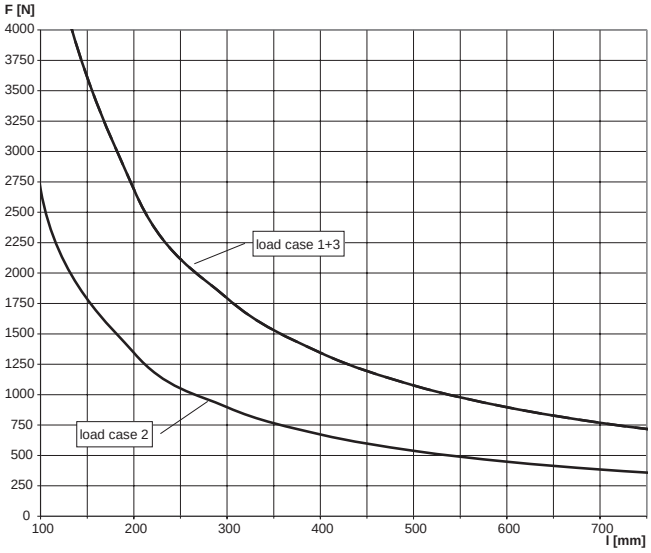

For the load curves, the permissible steel strain $\delta_{adm.}$ = 160 N/mm and the maximum deflection under load L/150 are not exceeded. Load values of the cantilever arms under consideration of the load capacity of the base plate. Fixings and screw fastenings must be calculated accordingly.

FCA 62

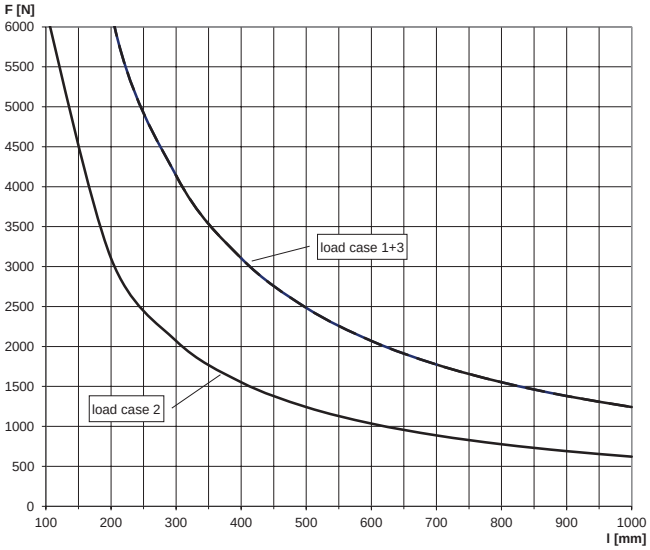

For the load curves, the permissible steel strain $\delta_{adm.}$ = 160 N/mm and the maximum deflection under load L/150 are not exceeded. Load values of the cantilever arms under consideration of the load capacity of the base plate. Fixings and screw fastenings must be calculated accordingly.

Cantilever arm FCA

FCA 21D

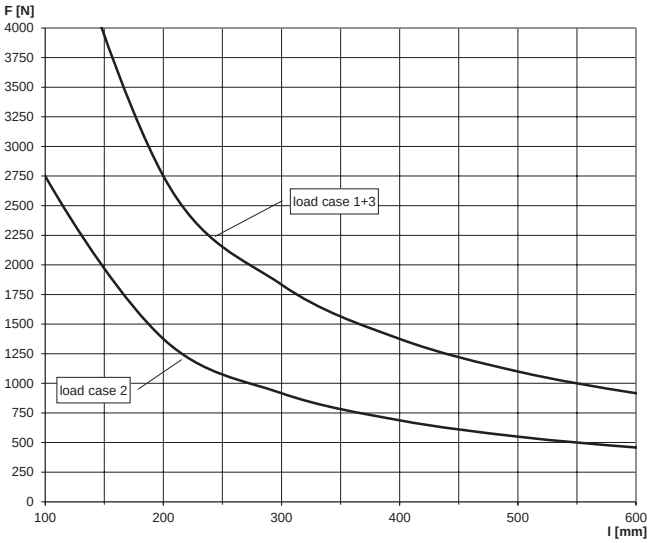

FCA 41D

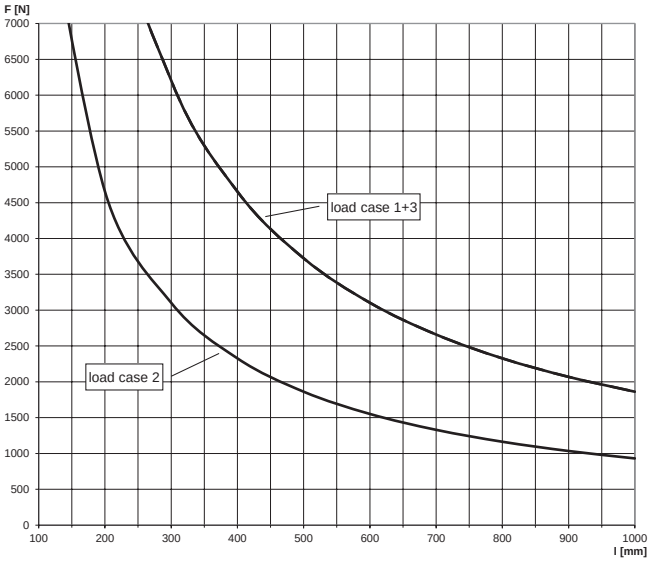

For the load curves, the permissible steel strain $\delta_{adm.}$ = 160 N/mm and the maximum deflection under load L/150 are not exceeded. Load values of the cantilever arms under consideration of the load capacity of the base plate. Fixings and screw fastenings must be calculated accordingly.

The large cantilever arm for heavy loads

Upright pipe on cantilever arm

Sliding element on cantilever

APPLICATIONS

- Quick and easy installation of pipelines with heavy loads, (e.g. along the wall)

ADVANTAGES/BENEFITS

- The robust construction, consisting of a basic and a support profile, allows for the bearing of heavy loads.
- The graduated range of lengths allows for an ideal adaptation to the application.
- The base plate's long slots, which are at 90° to one another, allow the arm to be easily aligned.
- The stamped teeth in the channel gives the sliding nuts a secure hold for high shear loads, e.g. for vertical installation.

PROPERTIES

- **Material:** steel S235 JR (material no.: 1.0037) acc. to DIN EN 10025
- **Zinc plating:** electro zinc-plated, min. 8 µm

TECHNICAL DATA

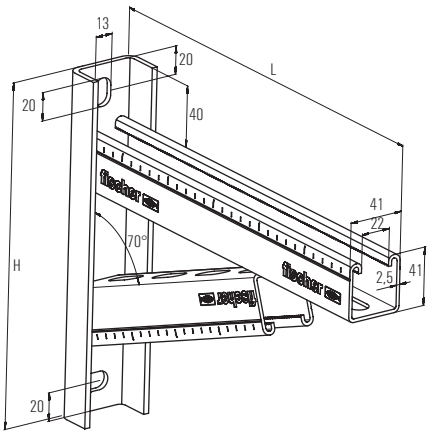

Item	Art.-No.	Length L_1 [mm]	Height H [mm]	Sales unit [pcs]
FCAM 300	**504477**	300	246	1
FCAM 400	**504479**	400	270	1
FCAM 500	**504480**	500	284	1
FCAM 600	**504482**	600	319	1
FCAM 700	**505460**	700	343	1

Large cantilever arm FCAM

LOADS

Item	Art.-No.	Max. recommended static load load case 1 F_{rec} [kN]	Max. recommended static load load case 2 F_{rec} [kN]	Max. recommended static load load case 3 F_{rec} [kN]
FCAM 300	**504477**	7.0	3.7	7.0
FCAM 400	**504479**	7.5	2.8	7.5
FCAM 500	**504480**	6.5	2.3	6.5
FCAM 600	**504482**	6.0	1.9	6.0
FCAM 700	**505460**	5.5	1.3	5.5

Load case 1

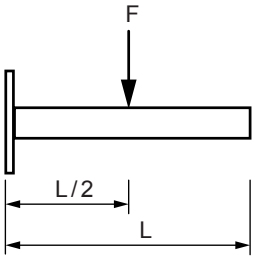

Load case 2

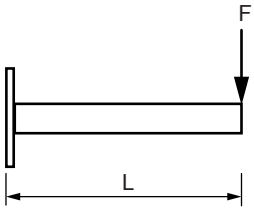

Load case 3

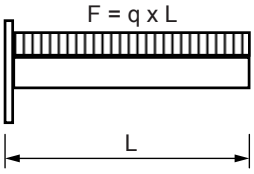

COVER CAP FEC

FEC 21 B

FEC 41 B

FEC 62 B

Item	Art.-No.	For profile	Material	Sales unit [pcs]
FEC 21 B	**077357**	41/21	polyethylene, black	100
FEC 41 B	**077355**	41/41	polyethylene, black	100
FEC 62 B	**505551**	41/62	polyethylene, black	100

Push-through connector for the quickest and easiest connection of FUS profiles

Cross connection on channel

Cantilever with saddle flange

APPLICATIONS

- Connection of FUS channels and construction elements by push-through principle
- Universal fitting for all push-through connection elements and FUS profiles

ADVANTAGES/BENEFITS

- The correct fit of the push-through connector and connection elements allows the quickest and easiest channel connection.
- The spring effect of the PFCN in set state guarantees a simple and precise positioning in the channel.
- The teeth on the push through connector provide a secure hold in the FUS channel.
- Installation by rotating 90° enables generally the post-installation in set channels.

PROPERTIES

- **Material Cap:** steel DD11 (material no. 1.0332) acc. to DIN EN 10111
- **Material Sliding nut:** steel S420MC, EN 10149-2
- **Material Hexagon screw:** 8.8 M10-28, DIN 933
- **Material Plastic parts:** polypropylene
- **Zinc plating:** electro zinc-plated acc. to DIN 50979, min. 8 µm

TECHNICAL DATA

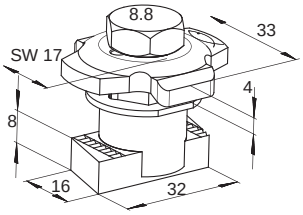

Item	Art.-No.	Thread A	Sales unit [pcs]		
PFCN 41	**533739**	M 10	50		

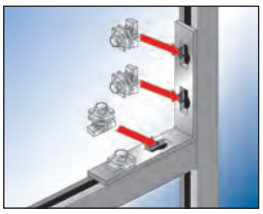

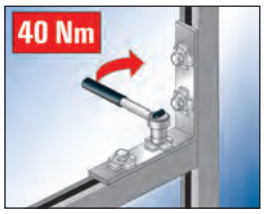

Push-through connector PFCN

LOADS

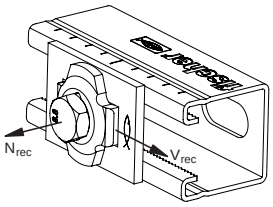

Item	Art.-No.	Max. recommended tension load for FUS 1,5 mm [kN]	Max. recommended tension load for FUS 2,0mm N_{rec} [kN]	Max. recommended tension load for FUS 2,5mm N_{rec} [kN]	Max. recommended shear load for FUS 1,5 mm [kN]	Max. recommended shear load for FUS 2,0 mm [kN]	Max. recommended shear load for FUS 2,5 mm [kN]	Tightening torque for screw grade ≥ 8.8 T_{inst} [Nm]
PFCN 41	**533739**	4.0	5.0	7.0	4.0	4.5	5.0	40

Note: Load values are based on the PFCN 41 push-through connector.

Construction element - Saddle flange PSF

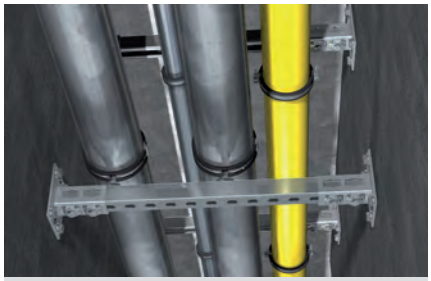

Pipe installation in escape route

Cantilever with saddle flange

APPLICATIONS

- Stable construction of connections between channels and building structures for the push-through system

ADVANTAGES/BENEFITS

- The perfect-fit saddle allows a simple installation by inserting the mounting channels
- The saddle flange's stable design offers a secure hold for a load-bearing construction

PROPERTIES

- **Material:** steel DD11 (material no. 1.0332) acc. to DIN EN 10111
- **Zinc plating:** electro zinc-plated acc. to DIN 50979, min. 8 µm

TECHNICAL DATA

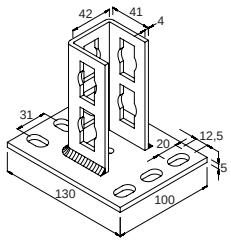

PSF 41

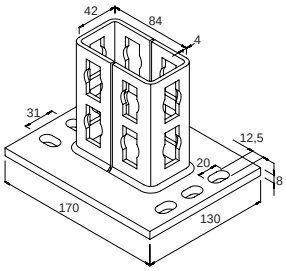

PSF 82

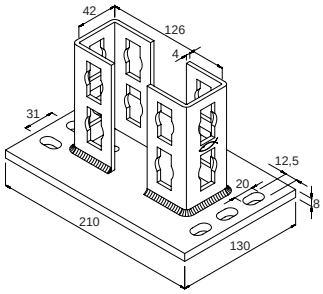

PSF 124

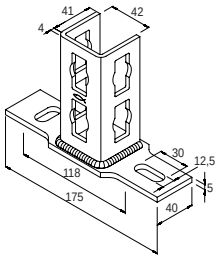

PSFQ 41

Item	Art.-No.	For profile	Sales unit [pcs]		
PSF 41	**533740**	21D, 41, 62	10		
PSF 82	**533741**	41 D	5		
PSF 124	**533742**	62 D	5		
PSFQ 41	**535266**	41	10		

LOADS

see Push-through connector PFCN

Construction element - Universal bracket PUWS

3D-frame constructions

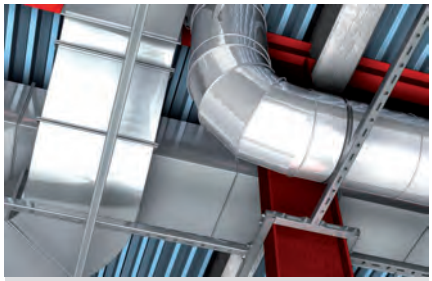

Support systems for ventilation

APPLICATIONS

- Reinforcement of supporting structures for the push-through system

ADVANTAGES/BENEFITS

- The universal brackets for the connection of FUS channels gives a supporting structure, great stability and safety (we recommend using in pairs).

PROPERTIES

- **Material:** steel DD11 (material no. 1.0332) acc. to DIN EN 10111
- **Zinc plating:** electro zinc-plated acc. to DIN 50979, min. 8 µm

TECHNICAL DATA

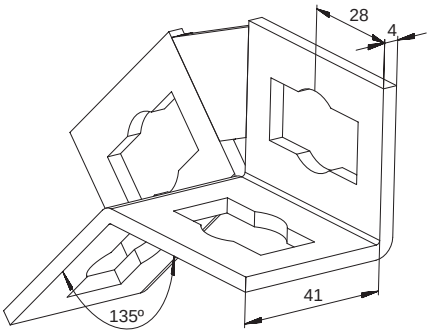

PUWS 2 x 2/135°

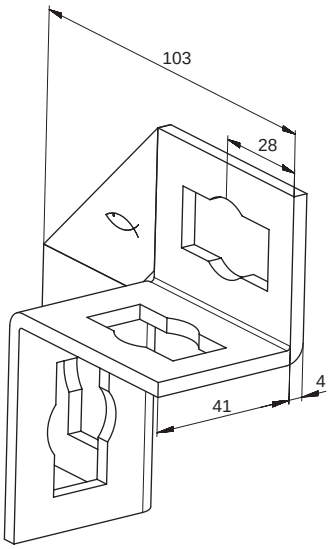

PUWS 2 x 2

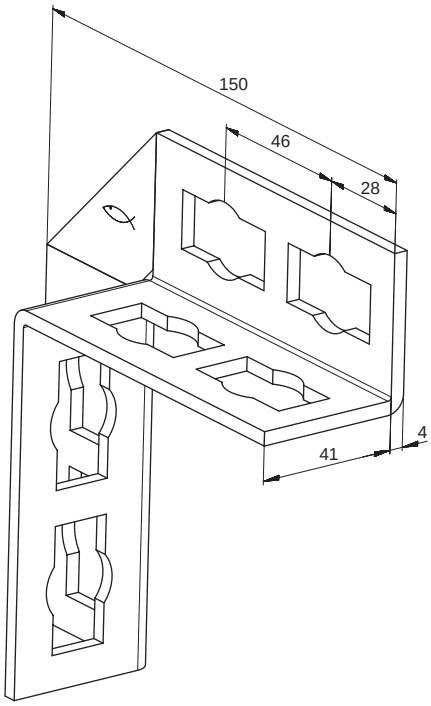

PUWS 4 x 4

Item	Art.-No.	Sales unit [pcs]			
PUWS 2 x 2/135°	533731	10			
PUWS 2 x 2	533733	10			
PUWS 4 x 4	533734	8			

LOADS

see Push-through connector PFCN

Construction element - Angle bracket PWK

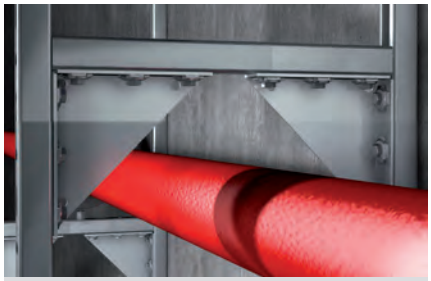

Solid frame construction

APPLICATIONS

- Reinforcement in the push-through system and for lateral fixing to the substrate

ADVANTAGES/BENEFITS

- The stable angle bracket ensures a supporting structure with a very high level of stability and safety.

PROPERTIES

- **Material:** steel DD11 (material no. 1.0332) acc. to DIN EN 10111
- **Zinc plating:** electro zinc-plated acc. to DIN 50979, min. 8 µm

TECHNICAL DATA

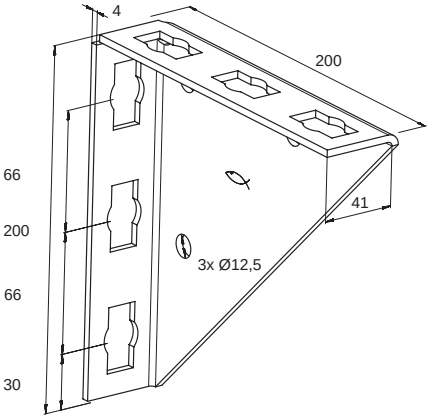

PWK 200/200

Item	Art.-No.	Sales unit [pcs]			
PWK 200/200	**533744**	15			

LOADS

see Push-through connector PFCN

Construction element – Variable bracket PVB

Massiv bracing of cantilever arm

APPLICATIONS

- Variable angular positioning of profile support in the push-through system
- Bracket for installation with FUS channels from 0° to 180°

ADVANTAGES/BENEFITS

- The design of the variable bracket PVB enables the fixation of mounting channels at an angle of 0° to 180°.
- The holes in the connecting element make it compatible with the push-through connector PFCN.
- The punched holes in the base plate allow the direct fixing onto a wall, ceiling or onto a mounting channel by screw or anchor.

PROPERTIES

- **Material:** steel DD11 (material no. 1.0332) acc. to DIN EN 10111
- **Zinc plating:** electro zinc-plated acc. to DIN 50979, min. 8 µm

TECHNICAL DATA

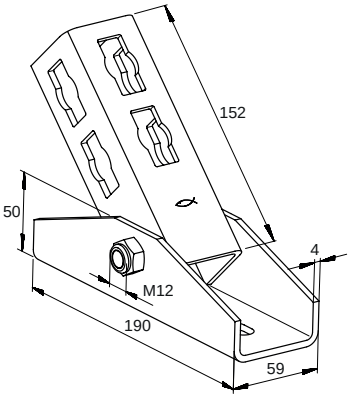

Item	Art.-No.	Sales unit [pcs]			
PVB	**534960**	5			

LOADS

see Push-through connector PFCN

Construction elements – Bracing elements PSAE 300 and 500

Supported channel

APPLICATIONS

- Elements for stable cantilever constructions made of FUS channels or FCA cantilever arms with push-through connector PFCN

ADVANTAGES/BENEFITS

- The stable bracing element PSAE gives the supporting structure very high stability and safety.
- The holes in the base plate of the element make it compatible with the push-through connector PFCN.
- An additional PU-washer allows for fixing of elements with formholes directly onto a wall or ceiling by anchor or screw.

PROPERTIES

- **Material:** steel P235TR2 (material no. 1.0255) acc. to EN 10216-1
- **Zinc plating:** electro zinc-plated acc. to DIN 50979, min. 8 µm

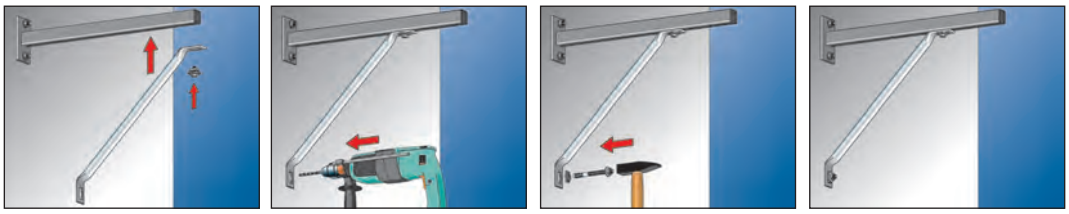

Bracing elements PSAE

TECHNICAL DATA

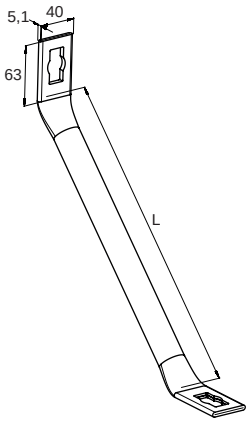

PSAE zl

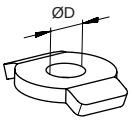

PU

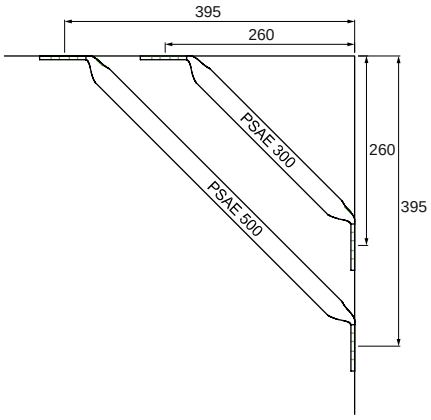

Item	Art.-No.	Length L [mm]	Sales unit [pcs]		
PSAE 300 Brace element	**535269**	300	10		
PSAE 500 Brace element	**535270**	500	10		
PU 10,5 Washer	**535271**	–	50		
PU 12,5 Washer	**535272**	–	50		

LOADS

see Push-through connector PFCN

Construction elements - Brackets PFFF

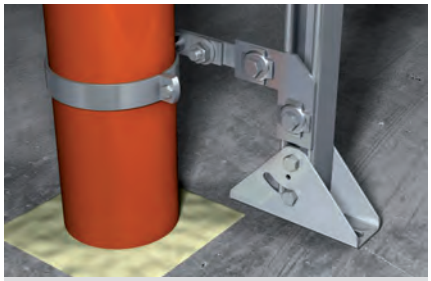

Waste water pipe

APPLICATIONS

- Arrangement of simple channel constructions in the push-through system

ADVANTAGES/BENEFITS

- The holes in the connecting elements make them compatible with the push-through connector PFCN.

PROPERTIES

- **Material:** steel DD11 (material no. 1.0332) acc. to DIN EN 10111
- **Zinc plating:** electro zinc-plated acc. to DIN 50979, min. 8 µm

TECHNICAL DATA

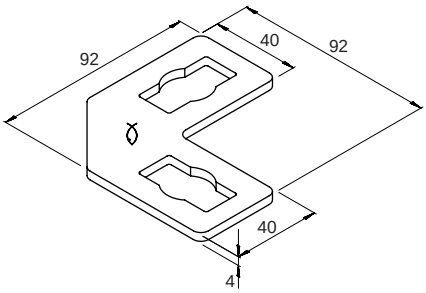

PFFF 2L

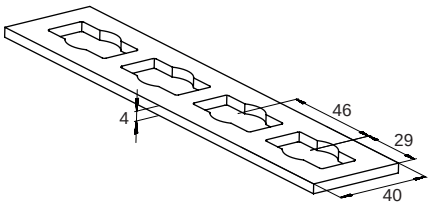

PFFF 4I

Item	Art.-No.	Sales unit [pcs]			
PFFF 2L	**533745**	20			
PFFF 4I	**535268**	25			

LOADS

see Push-through connector PFCN

Construction elements - Brackets PFAF

Frame constructions

Leightweight installation on cantilever

APPLICATIONS

- Arrangement of simple channel constructions in the push-through system

ADVANTAGES/BENEFITS

- The holes in the connecting elements make them compatible with the push-through connector PFCN.

PROPERTIES

- **Material:** steel DD11 (material no. 1.0332) acc. to DIN EN 10111
- **Zinc plating:** electro zinc-plated acc. to DIN 50979, min. 8 µm

TECHNICAL DATA

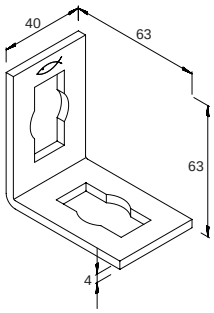

PFAF 2

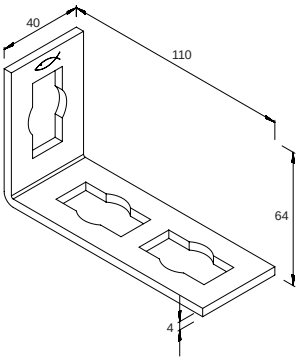

PFAF 3

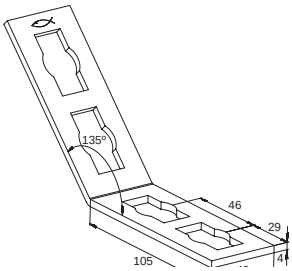

PFAF 4/135°

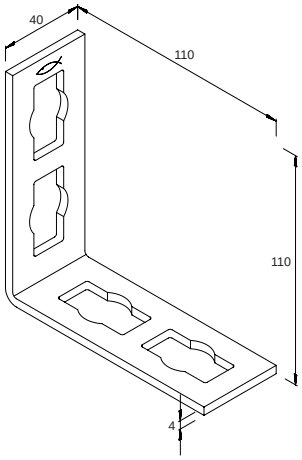

PFAF 4

Item	Art.-No.	Sales unit [pcs]			
PFAF 2	**533735**	25			
PFAF 3	**533736**	25			
PFAF 4/135°	**533737**	20			
PFAF 4	**535267**	25			

LOADS

see Push-through connector PFCN

Construction elements - Brackets PFUF

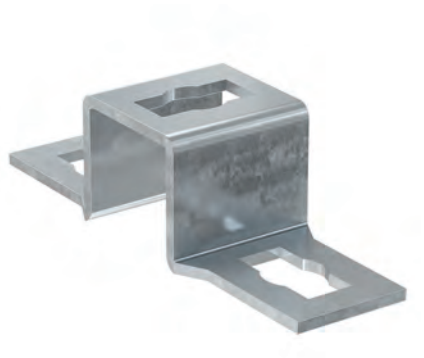

Cross connection on channel

Cross connection on channel

APPLICATIONS

- Connecting elements for multi-dimensional channel constructions

ADVANTAGES/BENEFITS

- The various shapes of the connecting elements offer flexibility during the installation of channel constructions.
- The holes in the connecting elements make them compatible with the push-through channel nut PFCN.

PROPERTIES

- **Material:** steel DD11 (material no. 1.0332) acc. to DIN EN 10111
- **Zinc plating:** electro zinc-plated acc. to DIN 50979, min. 8 µm

TECHNICAL DATA

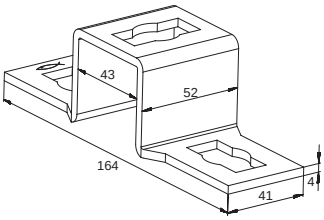

PFUF 41

Item	Art.-No.	Sales unit [pcs]			
PFUF 41	**533738**	25			

LOADS

see Push-through connector PFCN

Construction elements - Bracket PFUF 3D and 4D

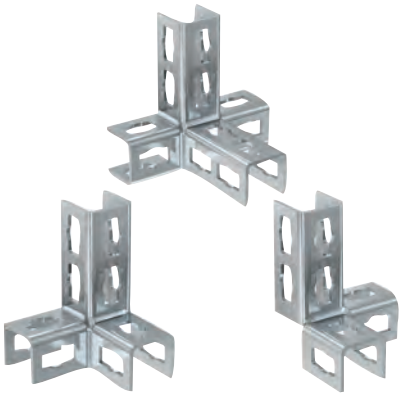

Frame constructions

APPLICATIONS

- Element for multidimensional constructions with FUS channels connected by the push-through connector PFCN

ADVANTAGES/BENEFITS

- The 3D PFUF construction elements enable multidimensional constructions in a very short time.
- The holes in the construction elements make them compatible with the push-through connector PFCN.
- The different shapes of the construction elements generate a high flexibility for channel constructions.

PROPERTIES

- **Material:** steel DD11 (material no. 1.0332) acc. to DIN EN 10111
- **Zinc plating:** electro zinc-plated acc. to DIN 50979, min. 8 µm

TECHNICAL DATA

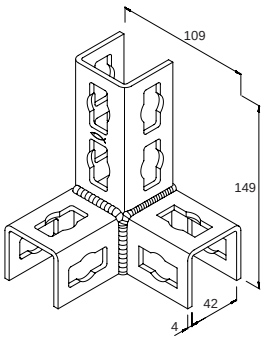

PFUF 3DL

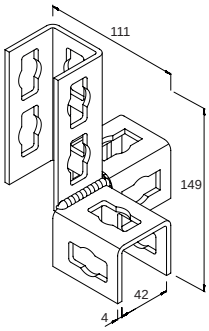

PFUF 3DR

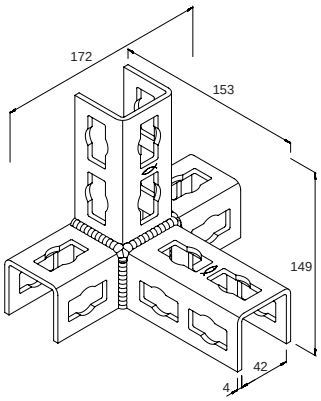

PFUF 4D

Item	Art.-No.	Sales unit [pcs]			
PFUF 3DL	535273	10			
PFUF 3DR	535274	10			
PFUF 4D	535275	10			

LOADS

see Push-through connector PFCN

Channel nut for quick and easy fixing in FUS profiles

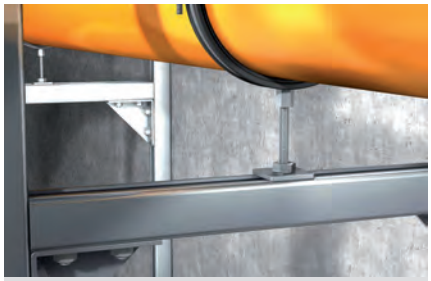

Connection on channel

Cross connection

APPLICATIONS

- FCN Clix P: connection of FUS channels and fixtures
- FCN Clix M: connection of pipe clamps to FUS channel under the use of threaded rods

ADVANTAGES/BENEFITS

- The sliding nut design enables a quick and easy setting in the channel.
- The spring effect of the plastic clasp guarantees simple and precise positioning in the channel.
- The FCN Clix P's flat plastic mounting with wings offers a good hold and a convenient mounting.
- The teeth on the sliding nut provide a secure hold in the FUS channel.
- Installation by rotating 90° enables post-installation in installed channel.

CERTIFICATES

Fire resistance classification R 120 according DIN EN 1363-1

MLAR R 30

PROPERTIES

- **Material**: steel S235 JR (material no. 1.0037) acc. to DIN EN 10025, plastic Nylon PA6
- **Zinc plating:** electro zinc-plated, min. 5 µm

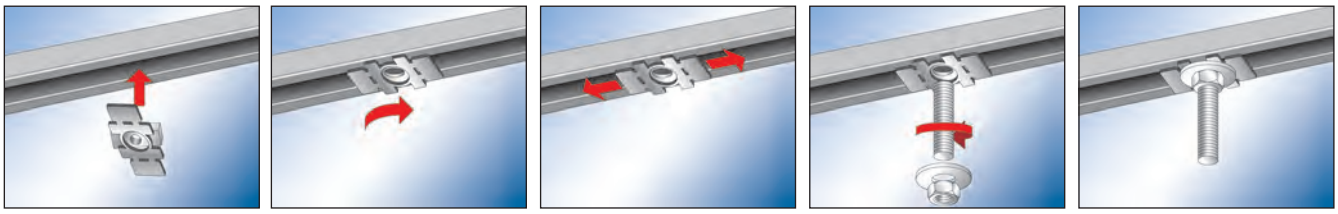

Connector FCN Clix P and FCN Clix M

TECHNICAL DATA

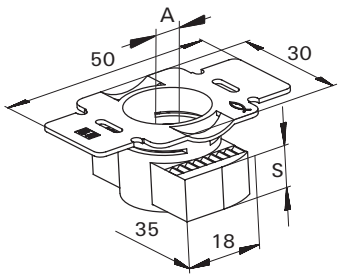

FCN Clix P

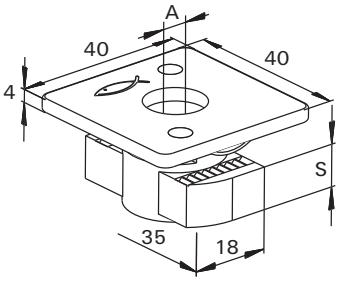

FCN Clix M

Item	Art.-No.	Fire test report	Thread A	Thickness S [mm]	Sales unit [pcs]
FCN Clix P 6	**504326**	–	M 6	6	100
FCN Clix P 8	**504327**	–	M 8	6	100
FCN Clix P 10	**504329**	X	M 10	8	100
FCN Clix P 12	**504331**	X	M 12	9.5	100
FCN Clix M 6	**504344**	–	M 6	6	100
FCN Clix M 8	**504345**	–	M 8	6	100
FCN Clix M 10	**504346**	X	M 10	8	100
FCN Clix M 12	**504347**	X	M 12	9.5	100

LOADS

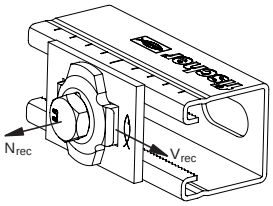

Item	Art.-No.	Max. recommended tension load for FUS 1,5 mm N_{rec} [kN]	Max. recommended tension load for FUS 2,0mm N_{rec} [kN]	Max. recommended tension load for FUS 2,5mm N_{rec} [kN]	Max. recommended shear load for FUS 1,5 mm V_{rec} [kN]	Max. recommended shear load for FUS 2,0/2,5 mm V_{rec} [kN]	Tightening torque for screw grade ≥ 8.8 T_{inst} [Nm]	Tightening torque for screw grade ≥ 4.6 T_{inst} [Nm]
FCN Clix P 6	**504326**	2.5	3.0	3.0	1.0	1.0	10	–
FCN Clix P 8	**504327**	3.0	4.0	4.0	1.5	2.0	20	–
FCN Clix P 10	**504329**	4.0	5.0	8.0	2.0	2.5	40	–
FCN Clix P 12	**504331**	4.0	5.0	8.0	2.0	3.0	50	–
FCN Clix M 6	**504344**	–	3.0	3.0	–	–	–	5
FCN Clix M 8	**504345**	–	4.0	4.0	–	–	–	10
FCN Clix M 10	**504346**	–	5.0	8.0	–	–	–	15
FCN Clix M 12	**504347**	–	5.0	8.0	–	–	–	20

Hammer-head bolt for quick and easy fixing in FUS profiles

Leightweight installation on cantilever

Bracings with UHRS

APPLICATIONS

- Connection of pipe clamps to the channel

ADVANTAGES/BENEFITS

- The hammer-head nut design for a quick and easy setting in the channel.
- The spring effect of the plastic bands guarantees simple and precise positioning in the channel.
- Installation by rotating 90° enables post-installation in installed channel.

PROPERTIES

- **Material washer:** steel DC01-C490 (material no. 1.0330) acc. to DIN EN 10139
- **Hammer head bolt:** resistance class 8.8
- **Nut DIN 934:** resistance class min. 4
- **Zinc plating:** electro zinc-plated, min. 5 µm

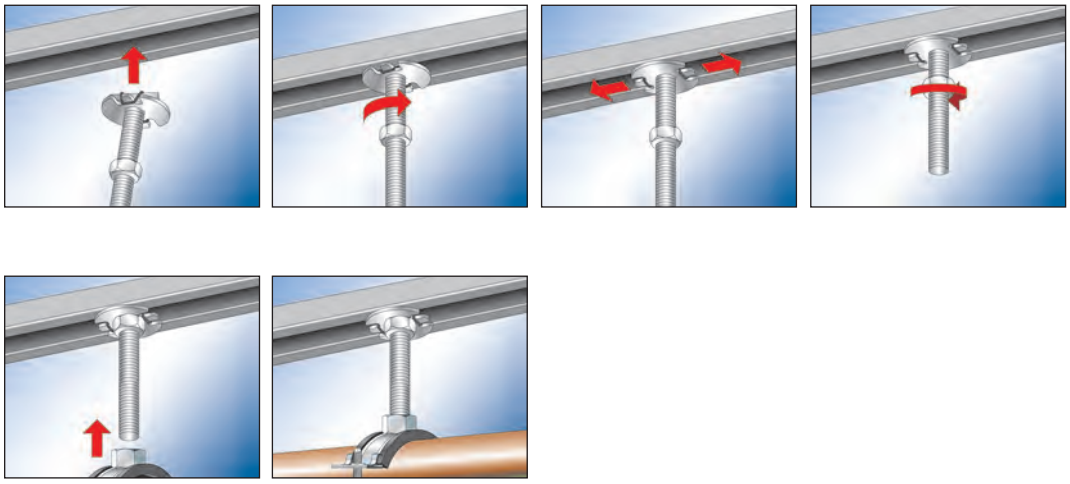

T-head bolt FHS Clix S

TECHNICAL DATA

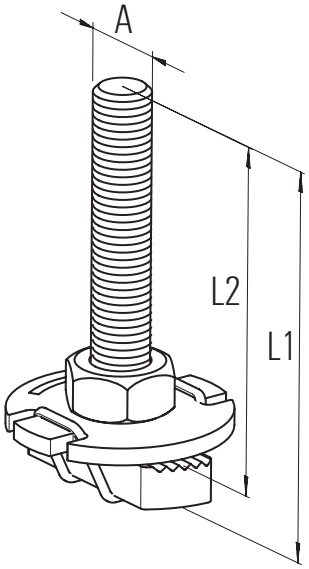

Item	Art.-No.	Thread A	Length L_1 [mm]	Length L_2 [mm]	Sales unit [pcs]
FHS CLIX S 8 x 30	**020914**	M 8	36	30	50
FHS CLIX S 8 x 40	**020915**	M 8	46	40	50
FHS CLIX S 8 x 60	**020916**	M 8	66	60	50
FHS CLIX S 10 x 30	**020917**	M 10	37	30	50
FHS CLIX S 10 x 40	**020918**	M 10	47	40	50
FHS CLIX S 10 x 60	**020919**	M 10	67	60	50
FHS CLIX S 12 x 30	**020969**	M 12	38	30	50
FHS CLIX S 12 x 40	**047316**	M 12	48	40	50
FHS CLIX S 12 x 60	**504320**	M 12	68	60	50

LOADS

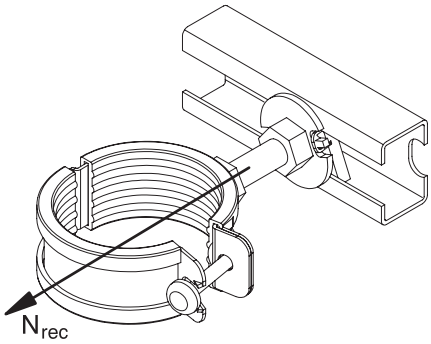

Item	Art.-No.	Max. recommended tension load for FUS 1,5 mm N_{rec} [kN]	Max. recommended tension load for FUS 2,0 mm N_{rec} [kN]	Max. recommended tension load for FUS 2,5 mm N_{rec} [kN]	Tightening torque T_{inst} [Nm]
FHS CLIX S 8 x 30	**020914**	3.0	4.0	4.0	5
FHS CLIX S 8 x 40	**020915**	3.0	4.0	4.0	5
FHS CLIX S 8 x 60	**020916**	3.0	4.0	4.0	5
FHS CLIX S 10 x 30	**020917**	3.0	4.0	5.0	10
FHS CLIX S 10 x 40	**020918**	3.0	4.0	5.0	10
FHS CLIX S 10 x 60	**020919**	3.0	4.0	5.0	10
FHS CLIX S 12 x 30	**020969**	3.0	4.0	5.0	10
FHS CLIX S 12 x 40	**047316**	3.0	4.0	5.0	10
FHS CLIX S 12 x 60	**504320**	3.0	4.0	5.0	10

Hammer-head bolt for easy fixing in FUS profiles

Leightweight installation on cantilever

APPLICATIONS

- Connection of pipe clamps to the channel

ADVANTAGES/BENEFITS

- The hammer-head nut design for an easy setting in the channel.
- Installation by rotating 90° enables post-installation in installed channel.

PROPERTIES

- **Material washer:** steel acc. to DIN EN 10139
- **Hammer head bolt:** steel with min. 400 N/mm²
- **Material nut:** strength category 4
- **Zinc plating:** electro zinc-plated, min. 5 µm

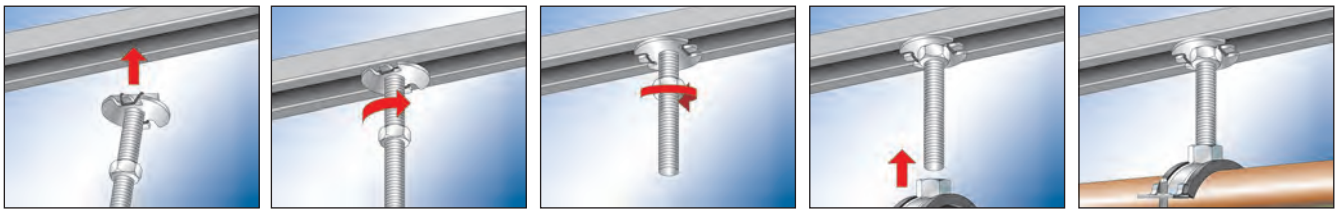

T-head bolt FCSN

TECHNICAL DATA

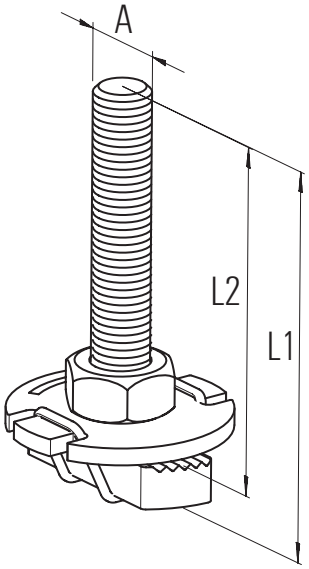

Item	Art.-No.	Thread A	Length L_1 [mm]	Length L_2 [mm]	Sales unit [pcs]
FCSN M 8 x 30	**092960**	M 8	36	30	50
FCSN M 8 x 40	**092961**	M 8	46	40	50
FCSN M 8 x 50	**093354**	M 8	56	50	50
FCSN M 8 x 60	**093355**	M 8	66	60	50
FCSN M 10 x 30	**093360**	M 10	38	30	50
FCSN M 10 x 40	**093361**	M 10	48	40	50
FCSN M 10 x 50	**093362**	M 10	58	50	50
FCSN M 10 x 60	**093363**	M 10	68	60	50
FCSN M 12 x 30	**093366**	M 12	39	30	50
FCSN M 12 x 40	**093367**	M 12	49	40	50

LOADS

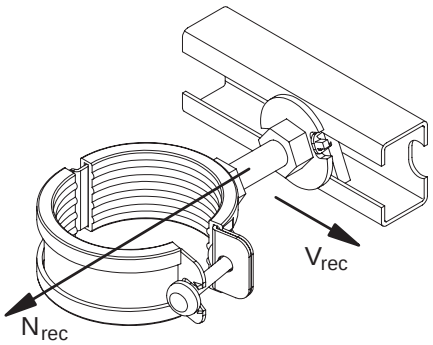

Item	Art.-No.	Max. recommended tension load for FUS 2,0 mm N_{rec} [kN]	Max. recommended tension load for FUS 2,5 mm N_{rec} [kN]	Tightening torque T_{inst} [Nm]
FCSN M 8 x 30	**092960**	4.0	4.0	5
FCSN M 8 x 40	**092961**	4.0	4.0	5
FCSN M 8 x 50	**093354**	4.0	4.0	5
FCSN M 8 x 60	**093355**	4.0	4.0	5
FCSN M 10 x 30	**093360**	4.0	5.0	10
FCSN M 10 x 40	**093361**	4.0	5.0	10
FCSN M 10 x 50	**093362**	4.0	5.0	10
FCSN M 10 x 60	**093363**	4.0	5.0	10
FCSN M 12 x 30	**093366**	4.0	5.0	10
FCSN M 12 x 40	**093367**	4.0	5.0	10

Connector - Channel nut FCN

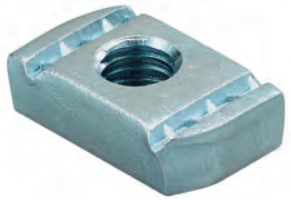

APPLICATIONS

- Simple hammer-head nut for installation in FUS channels
- The FCN is suitable for the connection of different fixtures and pipe clamps with the channel

ADVANTAGES/BENEFITS

- The teeth on the sliding nut provide a secure hold in the FUS channel.

PROPERTIES

- **Material:** steel with min. tensile strength of 415 N/mm²
- **Zinc plating:** electro zinc-plated, min. 5 µm

TECHNICAL DATA

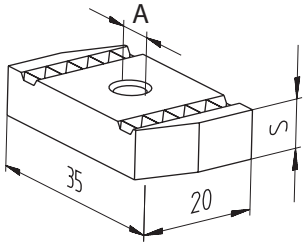

Item	Art.-No.	Thread A	Thickness S [mm]	Sales unit [pcs]
FCN 6	**077405**	M 6	6	100
FCN 8	**077407**	M 8	6	100
FCN 10	**077409**	M 10	8	100
FCN 12	**077411**	M 12	9	100

LOADS

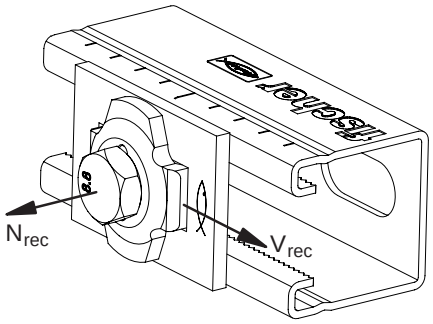

Item	Art.-No.	Max. recommended tension load for FUS 1,5 mm N_{rec} [kN]	Max. recommended tension load for FUS 2,0 mm N_{rec} [kN]	Max. recommended tension load for FUS 2,5 mm N_{rec} [kN]	Max. recommended shear load for FUS 1,5 mm V_{rec} [kN]	Max. recommended shear load for FUS 2,0/2,5 mm V_{rec} [kN]	Tightening torque for screw grade ≥ 8.8 T_{inst} [Nm]
FCN 6	**077405**	2.5	3.0	3.0	1.0	1.0	10
FCN 8	**077407**	3.0	4.0	4.0	1.5	2.0	20
FCN 10	**077409**	4.0	5.0	8.0	2.0	2.5	40
FCN 12	**077411**	4.0	5.0	8.0	2.0	2.5	50

Connector - Channel washer HK

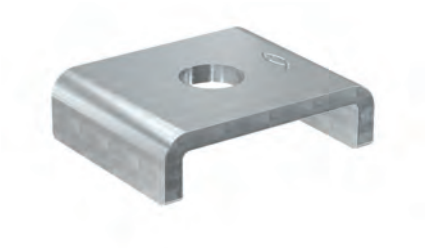

Lateral pipe mounting at channel

Channel installation at wall

APPLICATIONS

- Channel washer to strengthen the profile

ADVANTAGES/BENEFITS

- The U-shape of the channel washer prevents the profile from bending effectively.
- The shape of the channel washer makes the push-through installations of channel profiles quick and easy.

CERTIFICATES

PROPERTIES

- **Material:** steel S235 JR (material no.: 1.0037) acc. to DIN EN 10025
- **Zinc plating:** electro zinc-plated, min. 5 µm

TECHNICAL DATA

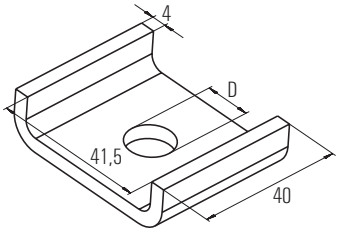

Item	Art.-No.	Fire test report	Hole-Ø A [mm]	Sales unit [pcs]	
HK 41 8,5	**547492**	–	8.5	50	
HK 41 10,5	**547493**	X	10.5	50	
HK 41 12,5	**547494**	X	12.5	50	

SEE ALSO

SKS
see page 185

U
see page 185

MU
see page 186

Construction element - Saddle flange SF

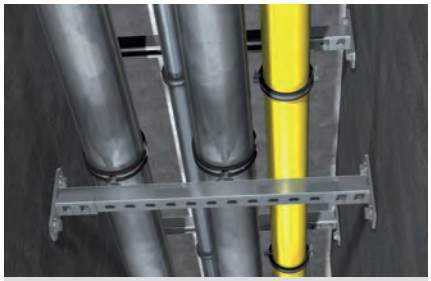

Pipe installation in escape route

Cantilever with saddle flange

CERTIFICATES

APPLICATIONS

- For solid connections between the channel and building structures

ADVANTAGES/BENEFITS

- The perfect-fit saddle of the SF enables a simple installation by inserting the channel.
- The saddle flange's stable design offers a secure hold for a load-bearing construction.

PROPERTIES

- **Material base plate:** steel DC01 (material no.1.0330) acc. to DIN EN 10139
- **Zinc plating base plate:** electro zinc-plated, min. 8 µm
- **Material U-Profile:** steel S235 JR (material no. 1.0037) nach DIN EN 10025
- **Zinc plating U-Profile:** electro zinc-plated, min. 8 µm

TECHNICAL DATA

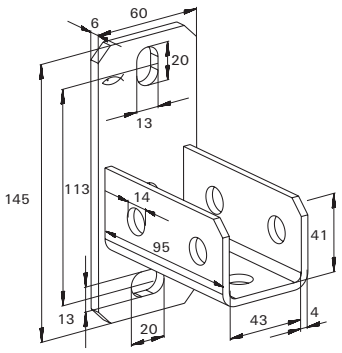

SF L 41

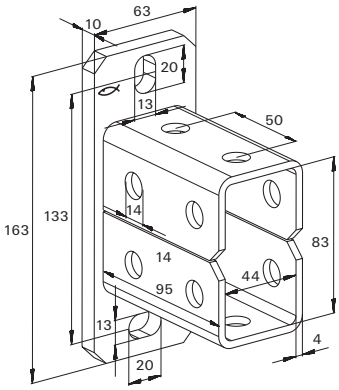

SF L 82

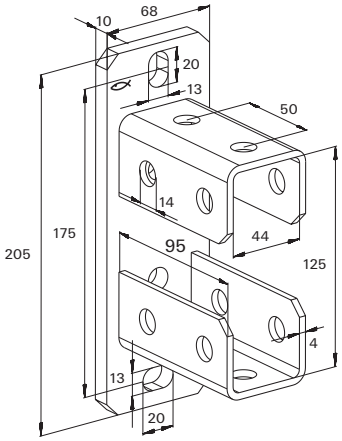

SF L 124

Item		Fire test report	For profile	Sales unit [pcs]	
SF L 41	**504355**	**X**	21, 41, 21D, 62	10	
SF L 82	**504357**	–	41 D	5	
SF L 124	**504358**	–	62 D	5	

Construction element - Universal bracket UWS

3D-frame constructions

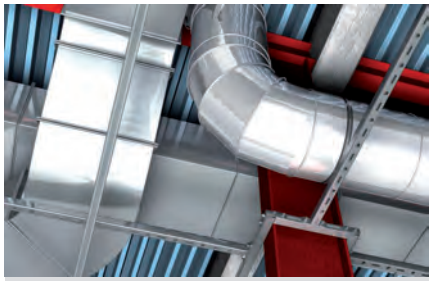

Support systems for ventilation

APPLICATIONS

- Universal angle bracket for the reinforcement of supporting structures

ADVANTAGES/BENEFITS

- The universal bracket for the connection of fischer channels gives a supporting structure, great stability and safety (we recommend using in pairs).

CERTIFICATES

PROPERTIES

- **Material:** steel S235 JR (material no.: 1.0037) acc. to DIN EN 10025
- **Zinc plating:** electro zinc-plated, min. 5 µm

TECHNICAL DATA

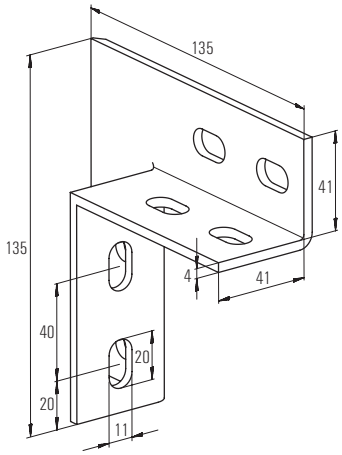

Item	Art.-No.	Fire test report	Sales unit [pcs]		
UWS	**049479**	**X**	10		

Construction element - Angle bracket WK

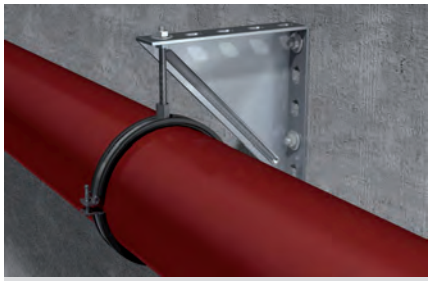

Heavy drainage pipe under angle bracket

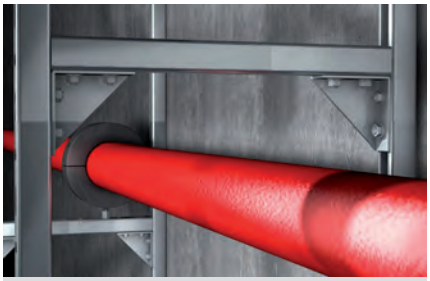

Solid frame construction

APPLICATIONS

- Reinforcement and fixing of pipelines and pipe components

ADVANTAGES/BENEFITS

- The design of the angle bracket allows for the fixing of pipe clamps or channels.
- The stable angle ensures a very high level of stability and safety to the structure.

PROPERTIES

- **Material:** steel DD11 (material no. 1.0332) acc. to DIN EN 10111
- **Zinc plating:** electro zinc-plated, min. 8 µm

TECHNICAL DATA

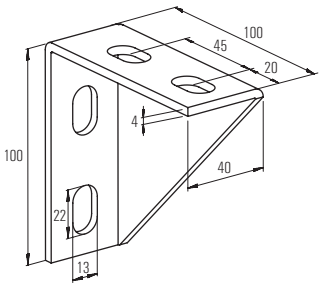

WK 100/100

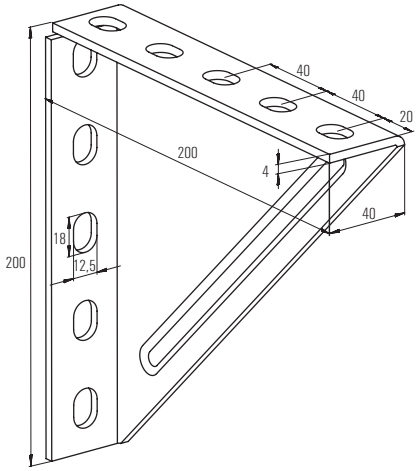

WK 200/200

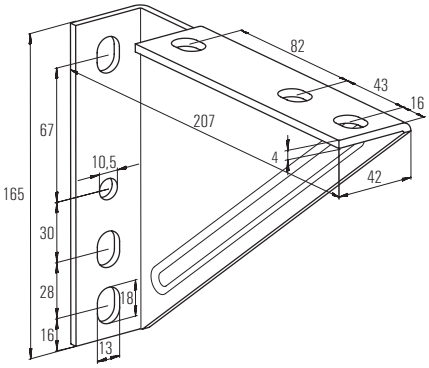

WK 207/165

Item	Art.-No.	Sales unit [pcs]			
WK 100/100	063559	5			
WK 200/200	079570	5			
WK 207/165	079571	6			

Angle bracket WK

LOADS

Item	Art.-No.	Max. recommended static load load case 1 F_{rec} [kN]	Max. recommended static load load case 2 F_{rec} [kN]
WK 100/100	063559	–	4.0
WK 200/200	079570	4.0	1.8
WK 207/165	079571	–	1.8

Load case 1

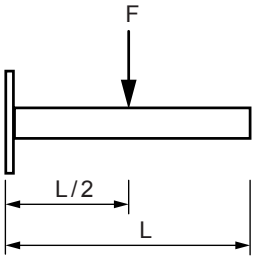

Load case 2

Construction element - Universal mounting UHRS

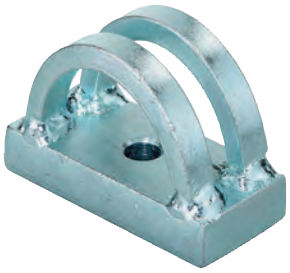

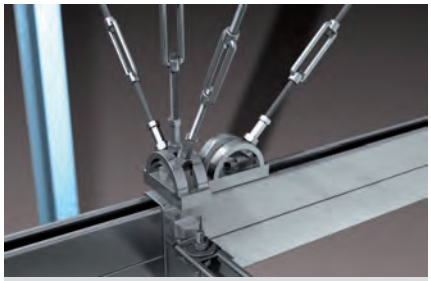

Channel bracing for installation grid

Bracings with UHRS

APPLICATIONS

- Variable anchor bracket for anchoring with threaded rods
- Can be used together with FHS Clix S M 12

ADVANTAGES/BENEFITS

- The design of the universal mount allows the anchoring by using threaded rods at all angles.
- The hole in the base plate enables the direct fixing onto a wall or ceiling, or onto a channels.

PROPERTIES

- **Material:** steel S235 JRG (material no. 1.0038) acc. to DIN EN 10025
- **Zinc plating:** electro zinc-plated, min. 3 µm

TECHNICAL DATA

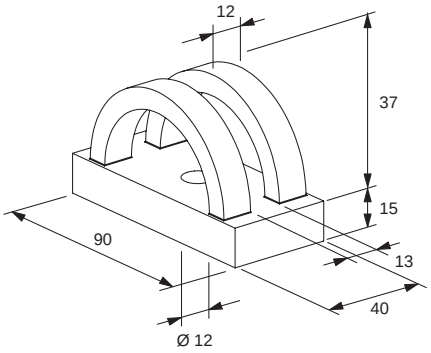

Item	Art.-No.	Sales unit [pcs]			
UHRS	**063938**	6			

LOADS

F_{rec} = 8.3 kN

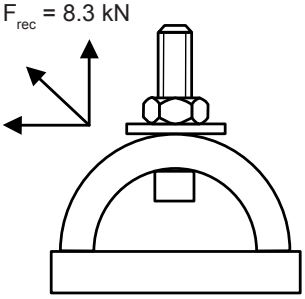

Construction element - Universal hinge FUH

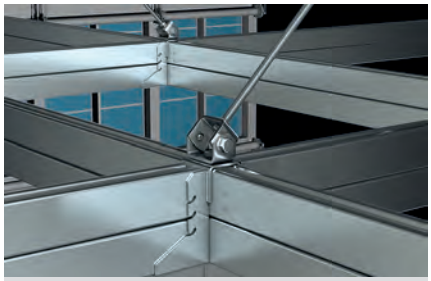

Inclined bracing for installation grid

APPLICATIONS

- Variable construction element for bracing with threaded rods or to fix pipelines to sloped substructures.
- Can be attached directly to the underground or to FUS channels.
- Flexible use especially for sloped substructures or undergrounds.

ADVANTAGES/BENEFITS

- Flexible solution for many applications such as fixing of pipelines to sloped undergrounds or bracing with threaded rods.
- Free adjustable angle up to 90°.
- Easy to use.

PROPERTIES

- **Material:** steel S235 JR (material no.: 1.0037)
- **Zinc plating:** electro zinc-plated, min. 5 µm

TECHNICAL DATA

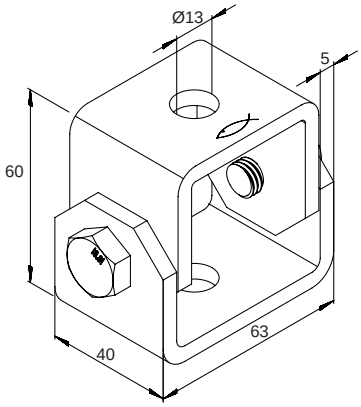

Item	Art.-No.		Sales unit [pcs]
FUH 13	**543065**		6

LOADS

Angle	90°	75°	60°	45°	30°	0°
Max. recommended load [kN]	6	5,5	5	4	3	2,5

Intermediate values can be interpolated.

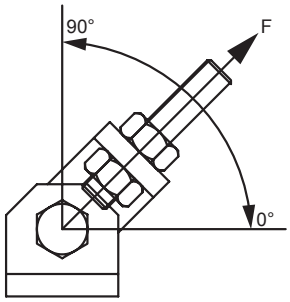

Construction element - Variable bracket VB

Massiv bracing of cantilever arm

APPLICATIONS

- Variable bracket for FUS channel profiles to built up supporting structures
- Bracket for installation with FUS channels from 0° to 180°

ADVANTAGES/BENEFITS

- The design of the variable bracket VB enables the fixation of mounting channels at an angle of 0° to 180°.
- Due to the holes on all three sides, the channels can be installed with the slot lateral.
- The punched holes in the base plate allow the direct fixing to the substructure or onto a mounting channel.

PROPERTIES

- **Material:** steel S235 JR (material no.: 1.0037) acc. to DIN EN 10025
- **Zinc plating:** electro zinc-plated, min. 5 µm

TECHNICAL DATA

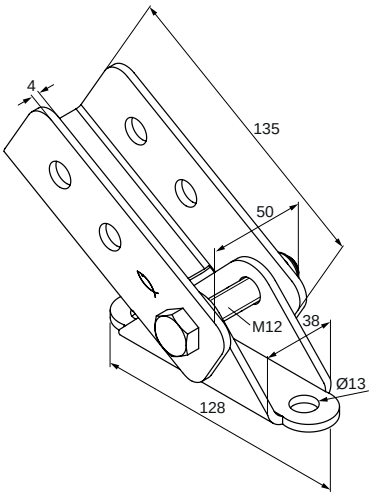

Item	Art.-No.	Sales unit [pcs]			
VB	**545650**	5			

LOADS

see channel nut FCN Clix P

Construction element - Threaded rod bracket FSB 45°

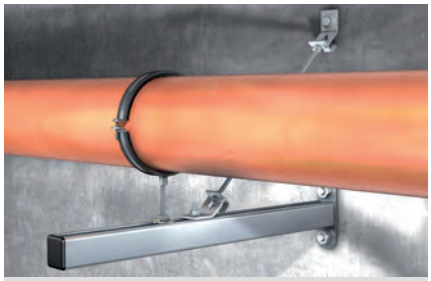

Heavy pipe on cantilever

Bracing for fixpoint

APPLICATIONS

- 45°-element for anchoring with M10 threaded rods

ADVANTAGES/BENEFITS

- The anchoring element's socket allows the fast insertion of a pre-mounted M10 threaded rod with nut.
- The hole in the base plate enables the direct fixing onto a wall or ceiling or onto a channel.

PROPERTIES

- **Material:** steel DD11 (material no. 1.0332) acc. to DIN EN 10111
- **Zinc plating:** electro zinc-plated, min. 5 µm

TECHNICAL DATA

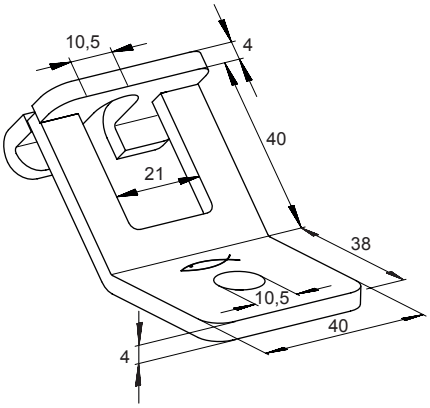

Item	Art.-No.	Sales unit [pcs]			
FSB 45°	**071269**	20			

LOADS

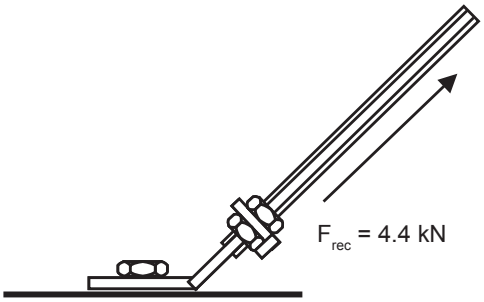

Clamp for fixing of profiles to steel girders

Channel to steelbeam

APPLICATIONS

- Fixing to steel girders requires two clamps per connection

ADVANTAGES/BENEFITS

- The design of the beam clamp allows fixing without drilling or welding.
- The various lengths of the beam clamp enable the fixing on most standard beams.
- The shape of the beam clamp allows the simple adjustment of the channel connection.

PROPERTIES

- **Material plate/U-bolt pipe hanger:** steel S235 JR (material no.10037) acc. to DIN EN 10025
- **Material hexagon nut:** steel resistance class 8
- **Zinc plating:** electro zinc-plated, min. 5 µm

TECHNICAL DATA

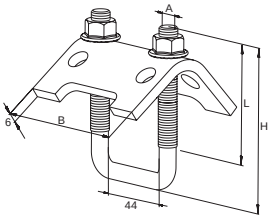

Item	Art.-No.	For profile	Thread A1	Width B B [mm]	Height H H [mm]	Length L [mm]	Sales unit [pcs]
TKR 21 - 42	**504363**	21/41	M 8	79	97	50	20
TKR 82	**504366**	62, 41D	M 10	79	137	80	20
TKR 124	**504367**	62 D	M 10	79	179	80	10

LOADS

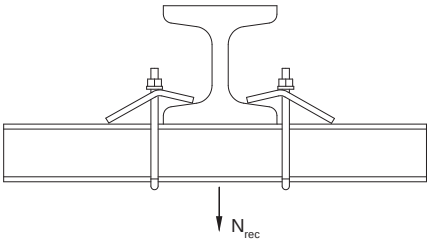

Item	Art.-No.	Max. recom. static load (centr. tension) $N_{recom.}$ [kN]	Tightening torque T_{inst} [Nm]	Max. clamping range on girders [mm]
TKR 21 - 42	**504363**	5.00	15	30
TKR 82	**504366**	10.00	20	30
TKR 124	**504367**	10.00	20	30

Construction elements - Brackets FFF

Frame constructions

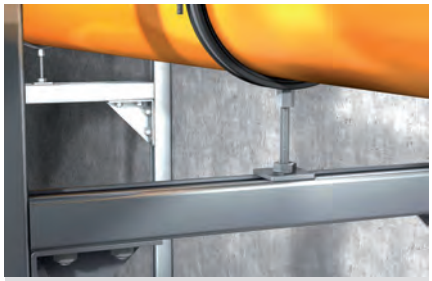

Connection on channel

APPLICATIONS

- Connecting elements for the joining or strengthening of simple channel constructions

PROPERTIES

- **Material:** steel S235 JR (material no.10037) acc. to DIN EN 10025
- **Zinc plating:** electro zinc-plated, min. 5 µm

TECHNICAL DATA

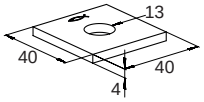

FFF 1

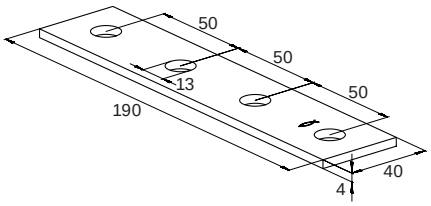

FFF 4

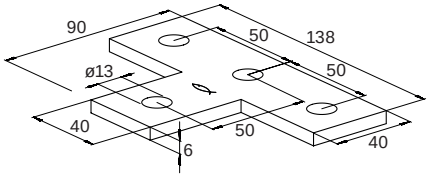

FFF 4T

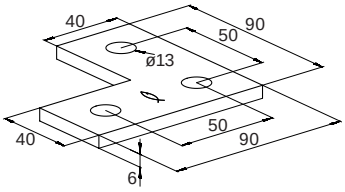

FFF 3L

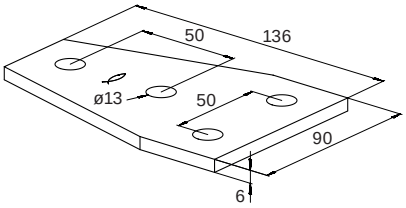

FFF 4D

Item	Art.-No.	Sales unit [pcs]			
FFF 1	**547500**	25			
FFF 3L	**504498**	25			
FFF 4	**547501**	25			
FFF 4T	**504500**	25			
FFF 4D	**504368**	25			

LOADS

see Channel nut FCN Clix P

Construction elements - Mounting bracket FAF

Frame constructions

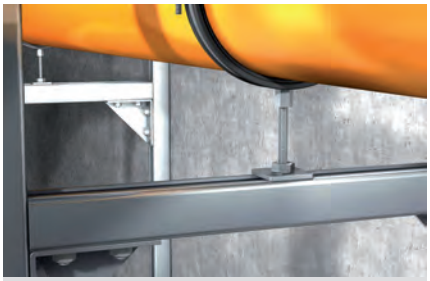

Connection on channel

APPLICATIONS

- Connecting elements for the joining or strengthening of simple channel constructions

PROPERTIES

- **Material:** steel S235 JR (material no.10037) acc. to DIN EN 10025
- **Zinc plating:** electro zinc-plated, min. 5 µm

TECHNICAL DATA

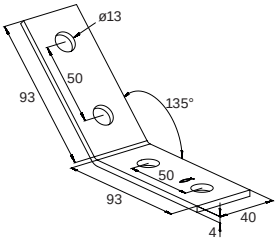

FAF 4/135°

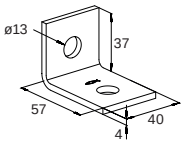

FAF 2

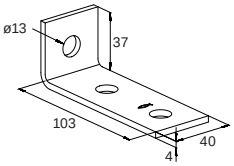

FAF 3

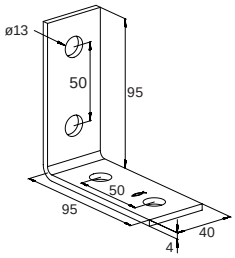

FAF 4

Item	Art.-No.	Sales unit [pcs]			
FAF 4/135°	**547505**	25			
FAF 2	**547502**	25			
FAF 3	**547503**	25			
FAF 4	**547504**	25			

LOADS

see Channel nut FCN Clix P

Construction elements - Mounting brackets FZF, FUF

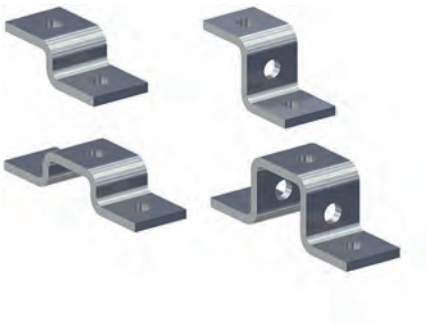

Cross connection on channel

APPLICATIONS

- Connecting elements for multi-dimensional channel constructions

ADVANTAGES/BENEFITS

- The various shapes of the connecting elements offer flexibility during the installation of channel constructions.
- The holes in the connecting elements make them compatible with the FCN Clix P.

PROPERTIES

- **Material:** steel S235 JR (material no.10037) acc. to DIN EN 10025
- **Zinc plating:** electro zinc-plated, min. 5 µm

TECHNICAL DATA

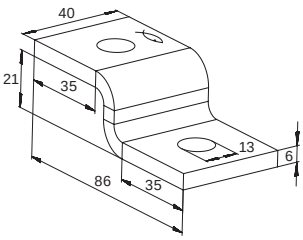

FZF 21

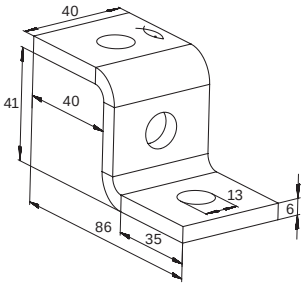

FZF 41

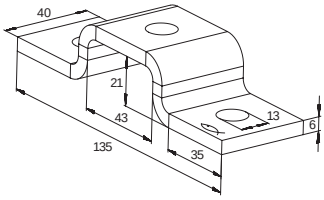

FUF 21

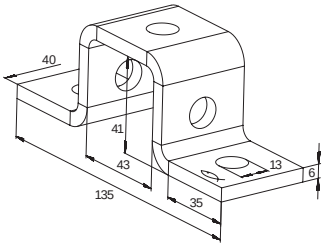

FUF 41

Item	Art.-No.	Sales unit [pcs]			
FZF 21	**504375**	25			
FZF 41	**504515**	25			
FUF 21	**504376**	25			
FUF 41	**504377**	25			

LOADS

see Channel nut FCN Clix P

Construction elements - Mounting brackets FUF

3D-frame constructions

APPLICATIONS

- Connecting elements for multi-dimensional channel constructions

ADVANTAGES/BENEFITS

- The various shapes of the connecting elements offer flexibility during the installation of channel constructions.
- The holes in the connecting elements make them compatible with the FCN Clix P.

PROPERTIES

- **Material:** steel S235 JR (material no.10037) acc. to DIN EN 10025
- **Zinc plating:** electro zinc-plated, min. 5 µm

TECHNICAL DATA

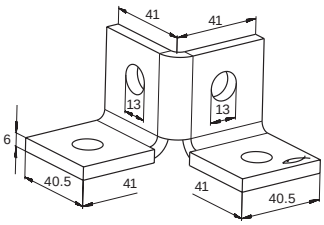

FUF 4Y

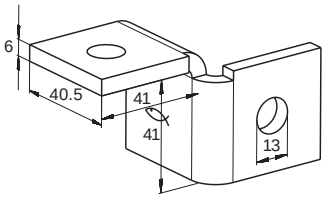

FUF 180°L

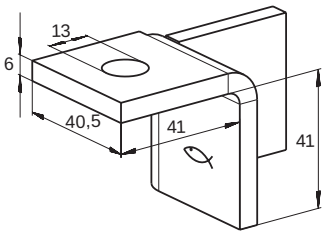

FUF 180°R

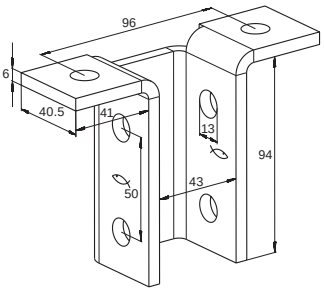

FUF 8T

Item	Art.-No.	Sales unit [pcs]			
FUF 4Y	**504378**	20			
FUF 180°L	**504379**	20			
FUF 180°R	**504383**	20			
FUF 8T	**504387**	10			

LOADS

see Channel nut FCN Clix P

fischer
innovative solutions

2d Installation grid

	Page
CHANNELS	
Channel FUS	143
CONNECTORS	
Cross connector FVS II	142
Connector FCN Clix P	147
Universal hinge FUH	147
Hexagonal connector VM	146
Turnbuckle SPS, Bolt left-hand/right-hand BLR	146

	Page
CONSTRUCTION ELEMENTS	
Channel connector FUF OC	144
Beam clamp TKR	146
ACCESSORIES	
Channel washer HK 41	144
Threaded rod G	144
Hexagonal nut MU	145
Washer U	145
Hexagonal screw SKS	145
Channel nut FCN	148
Cover cap FEC	147

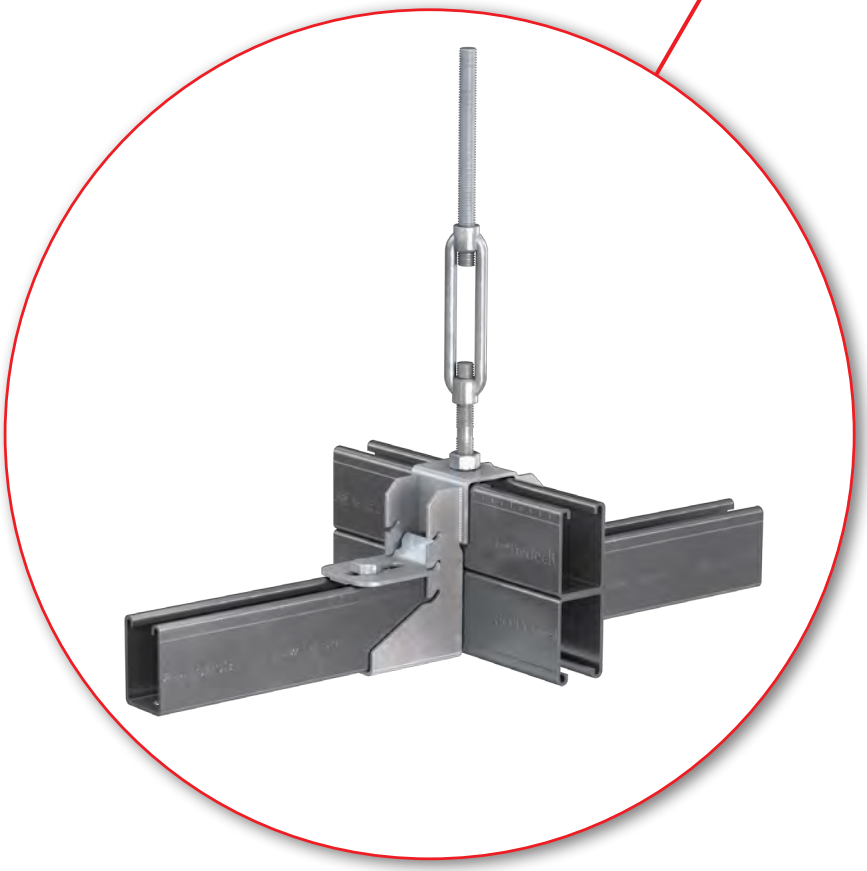

FIT FOR TODAY'S AND TOMORROW'S DEMANDS

Planning for the future means constantly being prepared to meet new requirements. That is why the fischer Installation Grid is the installation system for modern and future supply technology in industrial buildings. Its strengths are:

- quick installation and consequent low costs
- high flexibility and adaptability to change utilization of buildings
- good order and organization in media supply
- new design perspectives
- clear calculation of time and cost thanks to modular construction
- highly economical over the entire duration of utilization
- support in planning and installation provided by fischer engineers

Backed up by the entire know-how and experience of a leading manufacturer of fixing systems.

EFFECTIVE INSTALLATION WITH THE FISCHER INSTALLATION GRID

A separate level for the installation of media-supply equipment is constructed under the ceiling using a system of rails and special fixing elements from the fischer Installation Systems program. This Installation Grid can be specially adapted for any building.

Cross connector to create an flexible installation grid

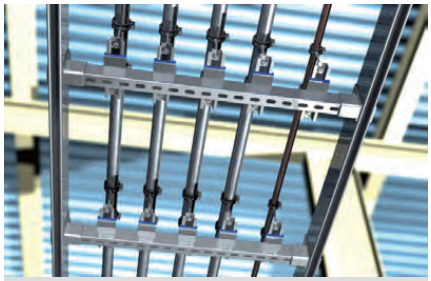

Sliding element on traverse made with FVS 3 II

Supply lines on installation grid

APPLICATIONS

- Cross connectors for installation of an installation grid by utilization of FUS channels
- Ceiling suspension with the use of threaded rods
- FUS channel lengthwise: FUS 62D
- FUS channel crosswise: FUS 41, FUS 21D, FUS 62, FUS 41D

ADVANTAGES/BENEFITS

- The design of the cross connector allows for the simple and time-saving creation of an installation grid.
- The cross connector over the vertical channel allows the installation to be carried out by one person.
- The design of the FVS 3 II are also ideal to create traverse installations.

PROPERTIES

- **Material:** steel S235 JR (material no.: 1.0037) acc. to DIN EN 10025
- **Zinc plating:** electro zinc-plated, min. 5 µm

TECHNICAL DATA

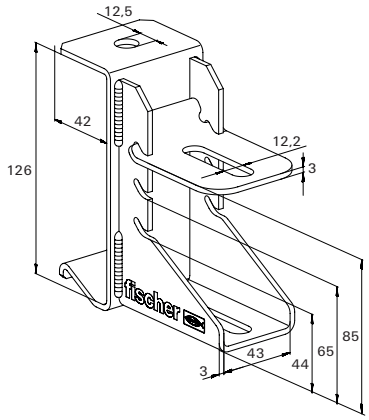

FVS 3 II

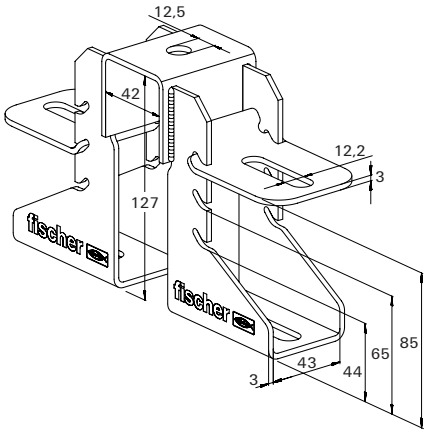

FVS 4 II

Art.-No.		For profile	Sales unit [pcs]
FVS 3 II	**543060**	FUS channel crosswise: FUS 41, FUS 21D, FUS 62, FUS 41D, FUS channel lengthwise: FUS 62D	8
FVS 4 II	**543063**	FUS channel crosswise: FUS 41, FUS 21D, FUS 62, FUS 41D, FUS channel lengthwise: FUS 62D	5

INSTALLATION

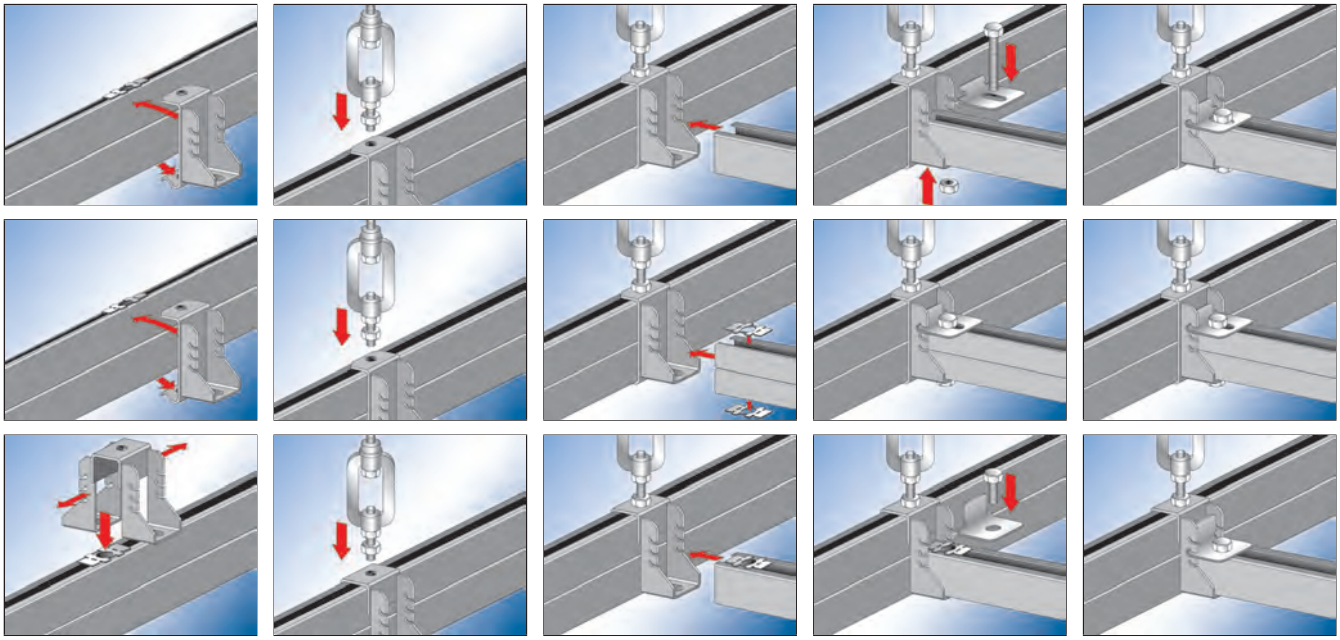

FUS CHANNELS

FUS

FUS D

Item	Art.-No.	Length l [mm]	Profile thickness [mm]	Weight [kg/m]	Sales unit [pcs]
FUS 41/2,0 - 3 m	**097658**	3000	2	2.06	1
FUS 41/2,0 - 6 m	**097659**	6000	2	2.06	1
FUS 41/2,5 - 3 m	**077347**	3000	2,5	2.45	1
FUS 41/2,5 - 6 m	**077537**	6000	2,5	2.45	1
FUS 62/2,5 - 6 m	**504457**	6000	2,5	3.27	1
FUS 21D/2,0 - 3 m	**504458**	3000	2	2.87	1
FUS 21D/2,0 - 6 m	**535531**	6000	2	2.87	1
FUS 41D/2,5 - 6 m	**504459**	6000	2,5	4.89	1
FUS 62D/2,5 - 6 m	**504460**	6000	2,5	6.55	1

Characteristics see on page 90

CHANNEL CONNECTOR FUF OC

Item	Art.-No.	Length l [mm]	Thickness s [mm]	Sales unit [pcs]
FUF OC 62	**504518**	400	4	10

Characteristics see on page 96

CHANNEL WASHER HK 41

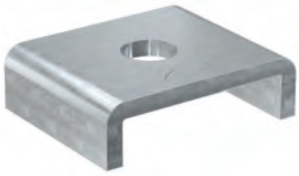

Item	Art.-No.	Sales unit [pcs]		
HK 41 12,5	**547494**	50		

Characteristics see on page 124

THREADED ROD G

Item	Art.-No.	Length l [mm]	Thread A	Sales unit [pcs]
G 12/3	**064056**	3000	M 12	5

Characteristics see on page 176

HEXAGONAL NUT MU

Item	Art.-No.	Thread A	Width across nut ⬡ SW [mm]	Sales unit [pcs]
MU M 12	**024650**	M 12	19	100

Characteristics see on page 186

WASHER U

Item	Art.-No.	Thickness S [mm]	Hole-Ø D [mm]	Sales unit [pcs]
U 12 x 40	**024649**	3	12.5	100

Characteristics see on page 185

HEXAGONAL BOLT SKS

Item	Art.-No.	Length L [mm]	Thread A1	Width across nut [mm]	Sales unit [pcs]
SKS 12 x 25	**535538**	25	M 12	19	100
SKS 12 x 65	**535539**	65	M 12	19	50
SKS 12 x 85	**505553**	85	M 12	19	100

Characteristics see on page 185

HEXAGONAL CONNECTOR VM

Item	Art.-No.	Thread A	Sales unit [pcs]	
VM M 12	**020971**	M 12	100	

Characteristics see on page 186

TURNBUCKLE SPS / BLR

Turnbuckle **SPS**

Bolt **BLR**

Item	Art.-No.	Thread A	Sales unit [pcs]	
SPS M 12	**064090**	M 12	25	
BLR 100 M12	**064091**	M 12	25	

Characteristics see on page 184

BEAM CLAMP TKR

Item	Art.-No.	For profile	Sales unit [pcs]	
TKR 124	**504367**	62 D	10	

Characteristics see on page 133

UNIVERSAL BRACKET FUH

Item	Art.-No.	Sales unit [pcs]		
FUH 13	**543065**	6		

Characteristics see on page 129

COVER CAP FEC

Item	Art.-No.	Material	Sales unit [pcs]	
FEC 21 B	**077357**	polyethylene, black	100	
FEC 41 B	**077355**	polyethylene, black	100	
FEC 62 B	**505551**	polyethylene, black	100	

Characteristics see on page 104

CHANNEL NUT FCN CLIX P

Item	Art.-No.	Thread A	Sales unit [pcs]	
FCN Clix P 12	**504331**	M 12	100	

Characteristics see on page 117

CHANNEL NUT FCN

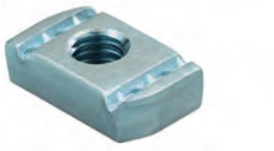

Item	Art.-No.	Thread A	Sales unit [pcs]	
FCN 12	**077411**	M 12	100	

Characteristics see on page 123

fischer
innovative solutions

2e Fixpoint and sliding elements

FIX POINTS		Page
Sound insulated fix point FSFP		152
Fixpoint clamp FFPS and -saddle FFPK		153

SLIDING ELEMENTS		Page
Sliding element GL		154
Sliding saddle SBS		155
Sliding element FSC1		156
Sliding hanger SB		157
Pendulum hanger PDH / PDH K		158

Sound insulated fix point FSFP

Sound insulated fixpoint at ceiling

APPLICATIONS

- Prevention of unwanted displacement between the pipes and the structures
- Ensuring of the expansion into the desired direction

ADVANTAGES/BENEFITS

- The fixpoint's ageing-resistant insulation elements is heat resistant and isolates the structure from sound transfer.
- The fully pre-mounted FSFP fixpoint ensures a quick and easy installation.
- The compact design of the fixpoint leads to high pipe loads in all fitting positions.

PROPERTIES

- **Clamp strap:** ST W22 (m+L34aterial no. 1.0032)
- **Base plate:** S235 JR (material no. 1.0038)
- **Zinc plating:** electro zinc-plated, min. 5 µm
- **Elastomer:** ISO 1629 SBR/EPDM chlorine-free and silicone-free
- **Temperature range:** -40 °C to +100 °C

TECHNICAL DATA

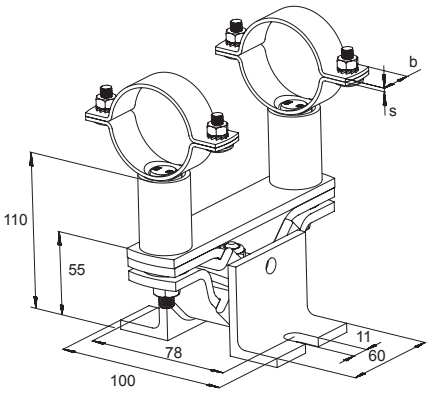

Item	Art.-No.	Size [inch]	Clamping range D [mm]	Locking screw	Width x thickness clamp band b x s [mm]	Sales unit [pcs]
FSFP 1"	**512716**	1"	33,7	M 6	20 x 1,5	1
FSFP 1 1/4"	**512717**	1 1/4"	42,4	M 6	20 x 2,0	1
FSFP 1 1/2"	**512718**	1 1/2"	48,3	M 6	20 x 2,0	1
FSFP 2"	**512719**	2"	60,3	M 8	30 x 2,5	1
FSFP 2 1/2"	**512720**	2 1/2"	76,1	M 8	30 x 2,5	1
FSFP 3"	**512721**	3"	88,9	M 8	30 x 2,5	1
FSFP 4"	**512722**	4"	114,3	M 8	30 x 2,5	1

LOADS

Item	Art.-No.	max. recommended load F_{rec} [kN]	
FSFP 1"	**512716**	4.0	
FSFP 1 1/4"	**512717**	4.0	
FSFP 1 1/2"	**512718**	4.0	
FSFP 2"	**512719**	4.0	
FSFP 2 1/2"	**512720**	4.0	
FSFP 3"	**512721**	4.0	
FSFP 4"	**512722**	4.0	

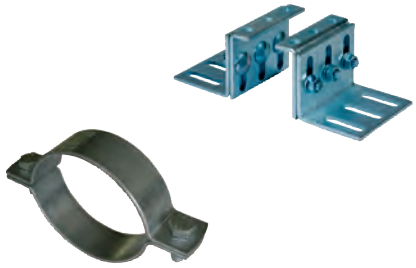

Fixpoint-pipecollar

APPLICATIONS

- Prevention of unwanted displacement between the pipes and the structures
- Ensuring of the expansion into the desired direction

ADVANTAGES/BENEFITS

- The system's modular design allows it to be adjusted to the required loads.
- The system's high load level enables increased fixing distances.
- The fixpoint saddle allows a height and angle adjustment.
- The special washers on the clamp and console ensure a quick installation.

PROPERTIES

- **FFPS:** S185-Z-150 NA-NK (material no. 1.0035) acc. to DIN EN 10035
- **FFPK:** S235 JR (material no. 1.0037) acc. to DIN EN 10025
- **Zinc plating:** electro zinc-plated, min. 5 µm

TECHNICAL DATA

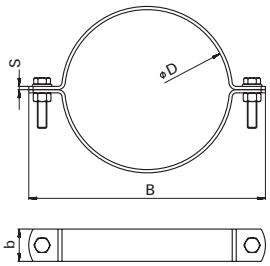

FFPS

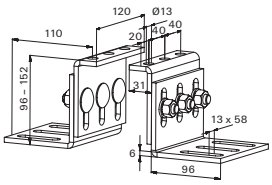

FFPK

Item	Art.-No.	Size [inch]	Clamping range D [mm]	Width B B [mm]	Locking screw	Width x thickness clamp band b x s [mm]	Tightening torque T_{inst} [Nm]	Sales unit [pcs]
FFPS 2"	**048510**	2"	56 - 61	137	M 12	40 x 4,0	60	1
FFPS 2 1/2"	**048511**	2 1/2"	75 - 80	156	M 12	40 x 4,0	60	1
FFPS 3"	**048512**	3"	88 - 93	170	M 12	40 x 4,0	60	1
FFPS 4"	**048513**	4"	108 - 115	191	M 12	40 x 4,0	60	1
FFPS 5"	**048660**	5"	133 - 140	217	M 12	40 x 4,0	60	1
FFPS 159 - 166	**048662**	159 - 166	159 - 166	243	M 12	40 x 4,0	60	1
FFPS 6"	**048663**	6"	167 - 172	250	M 12	40 x 4,0	60	1
FFPS 8"	**048664**	8"	219 - 225	303	M 12	40 x 4,0	60	1
FFPS 10"	**048665**	10"	267 - 274	351	M 12	40 x 4,0	60	1
FFPK	**048666**	–	–	–	–	–	–	1

LOADS

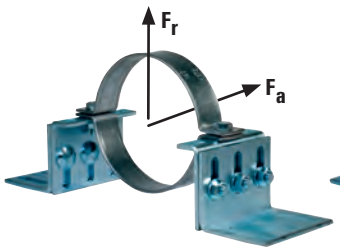

Point fixe 1 collier
Max. recom. load
axial F_a = 5500 N
radial F_r = 4660 N

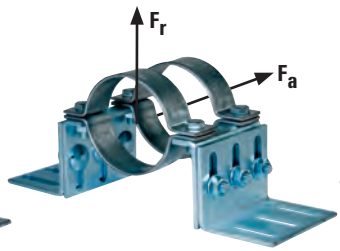

Fixpoint 2 clamps
Max. recom. load
axial F_a = 11000 N
radial F_r = 9320 N

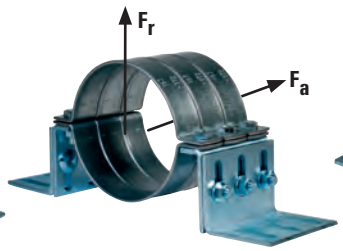

Fixpoint 3 clamps
Max. recom. load
axial F_a = 16500 N
radial F_r = 13980 N

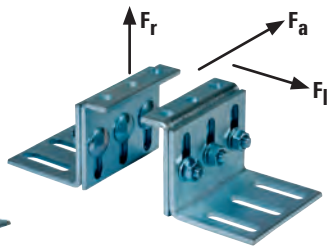

FFPK
Saddle max. recom. loads
radial F_r = 42000 N
lateral F_l = 17500 N

Sliding element GL

Frame constructions

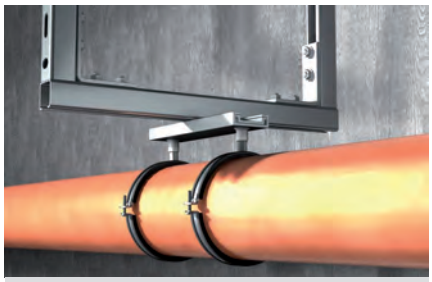

Pipe elongation with sliding element and suspended pipe

APPLICATIONS

- Sliding element with a maximum sliding distance of 160 mm for the absorption of axial length adjustments and expansion to pipelines

ADVANTAGES/BENEFITS

- The low height of the sliding element allows a space-saving installation.
- The large sliding distance of the sliding element enables large expansion distances.
- The twin pipe support prevents pipes from moving in the wrong direction.

PROPERTIES

- **Material:** steel S235 JR (material no.: 1.0037) acc. to DIN EN 10025
- **Zinc plating:** electro zinc-plated, min. 8 µm
- **Material sliding strips:** Nylon 6
- **Adhesion friction factor:** 0,27 - 0,3
- **Sliding friction factor:** 0,15 - 0,25
- **Thermal load capacity:** -30 °C to +110 °C

TECHNICAL DATA

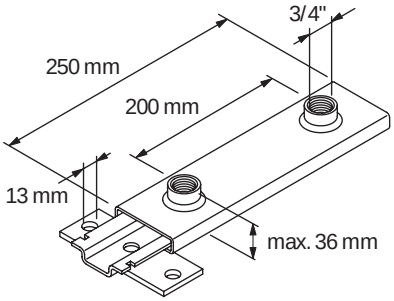

GLL 3/4"

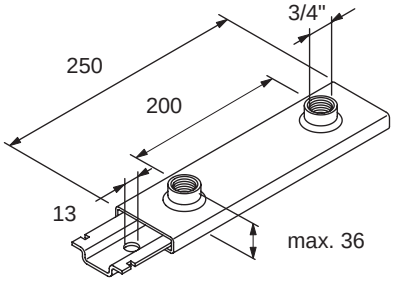

GL 3/4"

Item	Art.-No.	Sales unit [pcs]			
GLL 3/4"	064038	5			
GL 3/4"	064041	5			

LOADS

Item	Art.-No.	Max. recommended static load (suspended) N_{rec} [kN]	Max. recommended static load (upright) [kN]	Max. recom. pipe-Ø
GLL 3/4"	064038	3.5	4.0	200
GL 3/4"	064041	3.5	4.0	200

Sliding element on cantilever

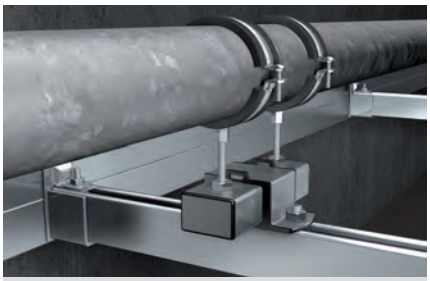

Pipe elongation with sliding element and upright pipe

APPLICATIONS

- Absorption of pipe expansions on two points
- Sliding distance for SBS 55 mm (M 10) and 60 mm (M 8), SBS 12/16 125 mm

ADVANTAGES/BENEFITS

- The two point pipe support prevents pipes from slipping of the duct.
- The low height of the sliding saddle allows a space-saving installation.

CERTIFICATES

PROPERTIES

- **Material:** steel DD11 (material no. 1.0332) acc. to DIN EN 10111 / PA GF 20
- **Zinc plating:** electro zinc-plated, min. 5 µm
- **Adhesion friction factor:** 0,25 - 0,30
- **Sliding friction factor:** 0,16 - 0,18
- **Temperature range:** -40 °C to +100 °C

TECHNICAL DATA

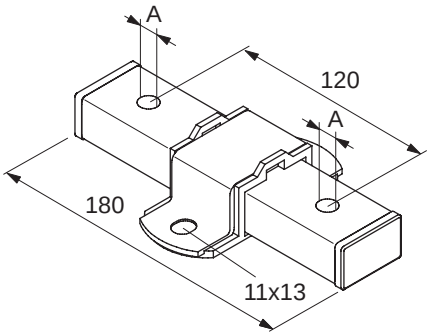

SBS

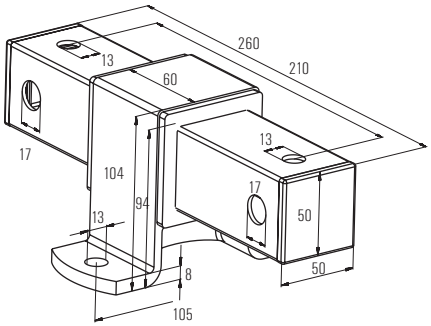

SBS 12/16

Item	Art.-No.	Fire test report	Thread A	Sales unit [pcs]
SBS M 8	**079685**	–	M 8	8
SBS M 10	**079686**	X	M 10	8
SBS 12/16	**047726**	X	M 12 / M 16	1

LOADS

Item	Art.-No.	Max. recommended static load (suspended) N_{rec} [kN]	Max. recommended static load (upright) N_{rec} [kN]
SBS M 8	**079685**	1.5	1.5
SBS M 10	**079686**	1.5	1.5
SBS 12/16	**047726**	7.8	7.8

Sliding element FSC1

Sliding element on console

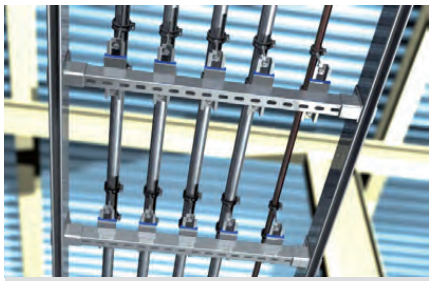

Sliding element on installation grid

APPLICATIONS

- Sliding element with a maximum sliding distance of 100 mm for the large axial expansion of pipelines

ADVANTAGES/BENEFITS

- The holes in the sliding saddle allow the use as a single or double sliding element.
- The special design of the base plate prevents a sliding out.

PROPERTIES

- **Material:** steel DD11 (material no. 1.0332) acc. to DIN EN 10111
- **Zinc plating:** electro zinc-plated, min. 5 µm
- **Temperature range:** -30 °C to +120 °C

TECHNICAL DATA

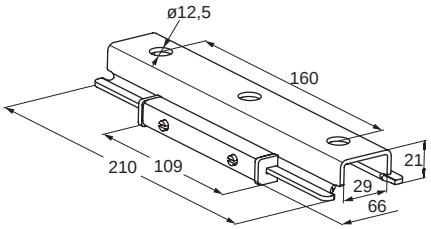

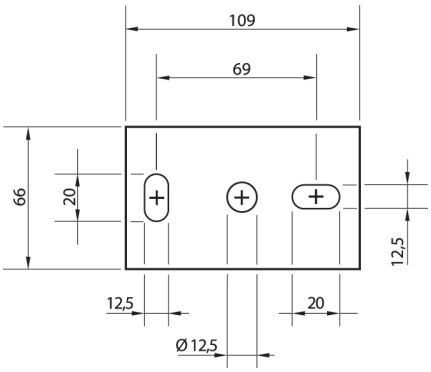

Item	Art.-No.	Sales unit [pcs]			
FSC 1	**507866**	12			

LOADS

Item	Art.-No.	Max. recommended static load (suspended) N_{rec} [kN]	Max. recommended static load (upright) N_{rec} [kN]
FSC 1	**507866**	1.3	1.0

Channel with sliding element

Channel to steelbeam

APPLICATIONS

- Adjustments of axial length to pipe-lines
- Installation of sliding elements in line with the expected length expansions (Ensuring that no sliding distance is lost and sliding isn't inhibited)

ADVANTAGES/BENEFITS

- The design of the sliding hanger allows pipes to be mounted securely and easily.
- The sliding hanger is ideally suited to adjust the axial length of pipelines.

CERTIFICATES

PROPERTIES

- **Material:** steel DD11 (material no. 1.0332) acc. to DIN EN 10111
- **Zinc plating:** electro zinc-plated, min. 3 µm

TECHNICAL DATA

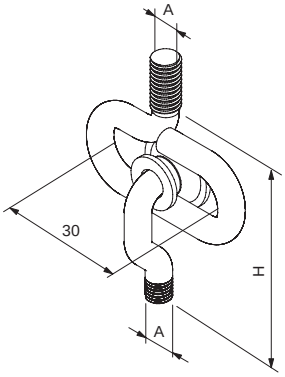

		Fire test report	Thread A	Height H H	Sales unit
Item	**Art.-No.**			**[mm]**	**[pcs]**
SB M 8	**079680**	–	M 8	75	25
SB M 10	**079681**	X	M 10	90	25

LOADS

Item	Art.-No.	Max. recom. statc load (centr. tension) [kN]	
SB M 8	**079680**	0.40	
SB M 10	**079681**	0.65	

Pendulum hanger PDH / PDH K

Double pendulum hanger

APPLICATIONS

- Single fixing for the absorption of pipeline length adjustments in any direction
- Installation of the pendulum in pairs for pipe movement without tipping
- Secure threaded rod with lock nut to prevent loosening

ADVANTAGES/BENEFITS

- The design of the pendulum hanger allows a rotation of 360°.
- The pendulum hanger's screw-in sleeve allows for large height adjustments.
- The max. pendulum angle of 12° enables the absorption of large expansions.
- The screw-in depth of the threaded bolts guarantees a high tension load.

CERTIFICATES

PROPERTIES

- **Material:** steel DD11 (material no. 1.0332) acc. to DIN EN 10111
- **Zinc plating:** electro zinc-plated, min. 5 µm

TECHNICAL DATA

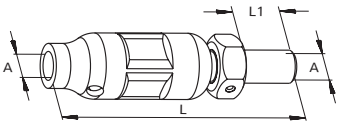

		Fire test report	Thread A	Length L	Length L_1	Sales unit
Item	**Art.-No.**			**[mm]**	**[mm]**	**[pcs]**
PDH K M 8	**068267**	–	M 8	50	18	50
PDH K M 10	**068269**	X	M 10	54	18	50
PDH M 8	**079676**	–	M 8	76	18	50
PDH M 10	**079677**	X	M 10	80	18	50
PDH M 12	**064037**	X	M 12	90	20	25

LOADS

		Max. recom. statc load (centr. tension)	
Item	**Art.-No.**	**[kN]**	
PDH K M 8	**068267**	2.4	
PDH K M 10	**068269**	3.0	
PDH M 8	**079676**	2.4	
PDH M 10	**079677**	3.0	
PDH M 12	**064037**	3.5	

fischer
innovative solutions

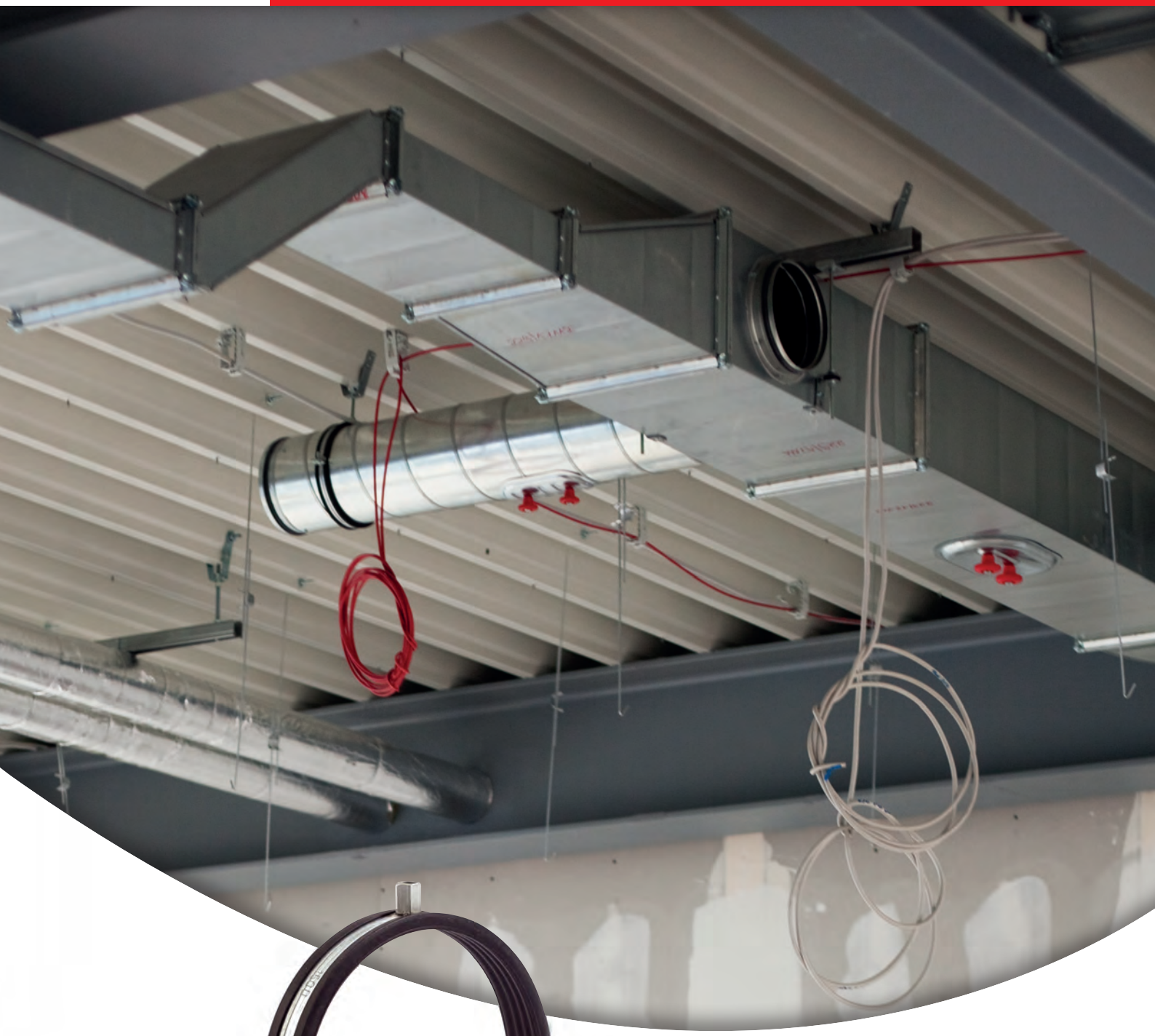

2f Airduct and metal roof fixings

	Page
PIPE CLAMPS	
Ventilation duct clamp LGS	162
SUSPENSION ELEMENTS	
Duct hanger L- and Z-type	164
Spiral duct hanger LRBN / LRB	165
Rubber inlay EMS	168

	Page
METAL CEILING HANGER	
Profile hanger TZ / TZH	166
Hole punch LZ, hole stamp LST	167

Clamps - Ventilation duct clamp LGS

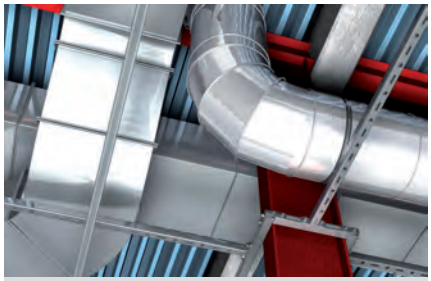

Support systems for ventilation

Spiral airduct on cantilever

APPLICATIONS

- Fixing of spiral lock seam pipes
- Fixing of pipes over 450 mm in diameter with two adjacent threaded rods
- Sound-insulation insert is held glued from Ø450 mm

ADVANTAGES/BENEFITS

- The large opening angle of the LGS enables a quick and easy installation.
- The LGS's two screws allow the adjustment to suit the outer pipe diameter.
- The locking screw with large recess/ cross recess head is secured to not get lost during installation.
- The sound-insulation insert has a form fit and can not fall out during the adjustment of the pipe.
- The LGS is drilled on both sides of the clamp from 450 mm diameter on. This allows for connection with two screws with nuts or two threaded rods with nuts. Thereby the recommended load of the clamp can be doubled.

PROPERTIES

- **Material:** steel DC01 (material no. 1.330) acc. to DIN EN 10130
- **Zinc plating:** electro zinc-plated, 5 - 9 µm
- **Connecting nut:** resistance welded domed nut, M8 / M10, SW 13
- **Locking screw:** oval head screw with combination recessed head
- **Material sound insulation insert:** SBR/EPDM; chlorine-free; silicone-free
- **Sound insulation:** for DIN 4109
- **Temperature range:** -50 °C to +110 °C
- **Hardness:** 45 ± 5° Shore A
- **Fire behaviour:** DIN 4102: Class B2

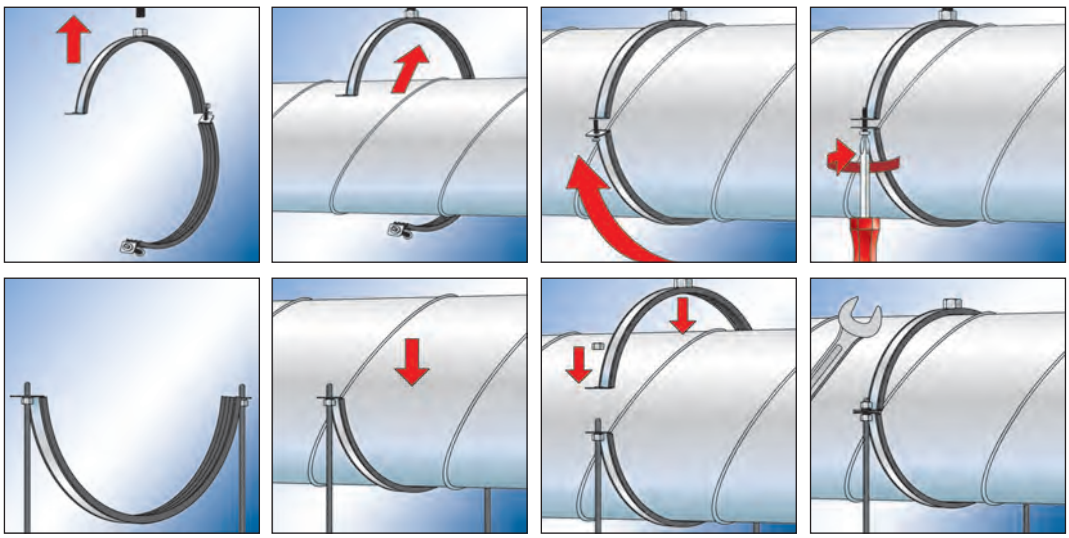

fischer innovative solutions

TECHNICAL DATA

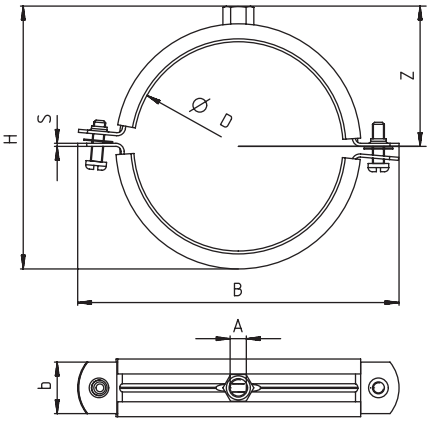

Item	Art.-No.	Thread A	Size DN	Height H H [mm]	Width B B [mm]	Width x thickness clamp band b x s [mm]	Height Z Z [mm]	Locking screw	Max. recom. statc load (centr. tension) [kN]	Sales unit [pcs]
LGS 80	**079491**	M 8 / M 10	80	108	133	25 x 1,5	62	M 6	0.6	25
LGS 90	**079492**	M 8 / M 10	90	118	143	25 x 1,5	67	M 6	0.6	25
LGS 100	**079493**	M 8 / M 10	100	128	153	25 x 1,5	72	M 6	0.6	20
LGS 112	**079494**	M 8 / M 10	112	140	165	25 x 1,5	78	M 6	0.6	20
LGS 125	**079495**	M 8 / M 10	125	153	178	25 x 1,5	85	M 6	0.6	10
LGS 140	**079496**	M 8 / M 10	140	168	193	25 x 1,5	92	M 6	0.6	10
LGS 150	**079497**	M 8 / M 10	150	178	203	25 x 1,5	97	M 6	0.6	10
LGS 160	**079498**	M 8 / M 10	160	188	213	25 x 1,5	102	M 6	0.6	10
LGS 180	**079499**	M 8 / M 10	180	208	233	25 x 1,5	112	M 6	0.6	10
LGS 200	**079500**	M 8 / M 10	200	228	253	25 x 1,5	122	M 6	0.6	15
LGS 224	**079501**	M 8 / M 10	224	252	280	25 x 1,5	134	M 6	0.6	15
LGS 250	**079502**	M 8 / M 10	250	278	306	25 x 1,5	147	M 6	0.6	10
LGS 280	**079503**	M 8 / M 10	280	308	336	25 x 1,5	162	M 6	0.6	10
LGS 300	**079504**	M 8 / M 10	300	328	356	25 x 1,5	172	M 6	0.6	10
LGS 315	**079505**	M 8 / M 10	315	343	371	25 x 1,5	180	M 6	0.6	10
LGS 355	**079506**	M 8 / M 10	355	383	410	25 x 1,5	200	M 6	0.6	10
LGS 400	**079507**	M 8 / M 10	400	428	455	25 x 1,5	222	M 6	0.6	10
LGS 450	**024637** 1)	M 8 / M 10	450	480	510	25 x 2,5	248	M 10	0.8	1
LGS 500	**024638** 1)	M 8 / M 10	500	530	560	25 x 2,5	273	M 10	0.8	1
LGS 560	**024639** 1)	M 8 / M 10	560	590	620	25 x 2,5	303	M 10	0.8	1
LGS 600	**024640** 1)	M 8 / M 10	600	630	661	25 x 2,5	323	M 10	0.8	1
LGS 630	**542960** 1)	M 8 / M 10	630	660	691	25 x 2,5	338	M 10	0.8	1
LGS 710	**542962** 1)	M 8 / M 10	710	740	771	25 x 2,5	378	M 10	0.8	1
LGS 800	**024643** 1)	M 8 / M 10	800	831	861	25 x 3,0	424	M 10	0.8	1
LGS 900	**024644** 1)	M 8 / M 10	900	931	960	25 x 3,0	474	M 10	0.8	1
LGS 1000	**024645** 1)	M 8 / M 10	1000	1031	1060	25 x 3,0	527	M 10	0.8	1
LGS 1120	**024646** 1)	M 8 / M 10	1120	1151	1183	25 x 3,0	584	M 10	0.8	1
LGS 1250	**024647** 1)	M 8 / M 10	1250	1281	1313	25 x 3,0	649	M 10	0.8	1

1) The installation with two threaded rods allows to double the given recommended loads.

Fastening components - Duct hanger L- and Z-type

Airduct under steel beam with beam clamp

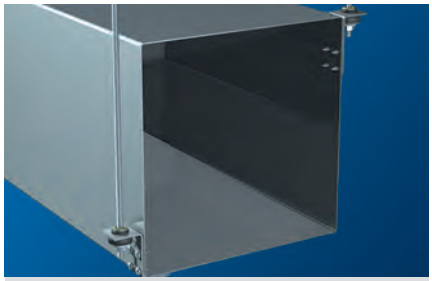

Suspended airduct

APPLICATIONS

- Fastening component with sound-insulation

ADVANTAGES/BENEFITS

- The ceiling hanger's sound-insulation element reduces the transfer of vibration and noise.
- The multiple holes on the ceiling attachments allow a quick and easy fastening with self-drilling screws or rivets.
- The through hole in the ceiling hangers allows a simple alignment and height adjustment of the threaded rod.

PROPERTIES

- **Material:** steel DD11 (material no. 1.0332) acc. to DIN EN 10111
- **Zinc plating:** electro zinc-plated, min. 3 µm
- **Sound insulation:** for DIN 4109
- **Temperature range:** -50 °C to +110 °C
- **Hardness:** 45 ± 5° Shore A
- **Fire behaviour:** DIN 4102: Class B2

TECHNICAL DATA

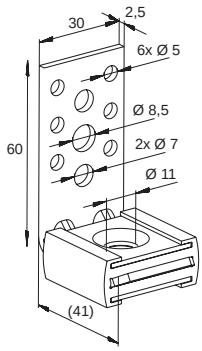

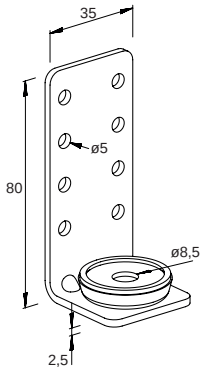

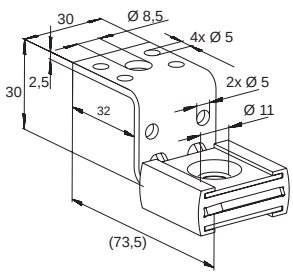

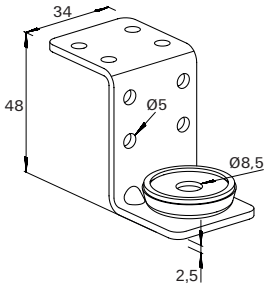

LKHN LKH ZKHN ZKH

Item	Art.-No.	For thread	Max. recom. static load (centr. tension) $N_{recom.}$ [kN]	Sales unit [pcs]
LKHN	**516537**	M 8 / M 10	0.90	50
LKH	**024671**	M 8	0.50	50
ZKHN	**516540**	M 8 / M 10	0.90	50
ZKH	**024674**	M 8	0.50	50

Fastening components - Spiral duct hanger LRB and LRBN

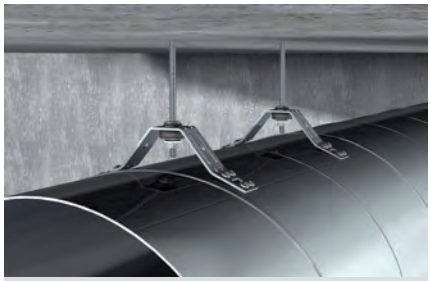

Spiral duct pipe with sound insulated hanger

APPLICATIONS

- Fastening component with sound-insulation (riveted and inserted versions)

ADVANTAGES/BENEFITS

- The multiple holes on the duct hangers allow a quick and easy fastening with self-drilling screws or rivets.
- The duct hangers sound-insulation element reduces the transfer of vibration and noise.
- The through hole in the duct hangers allows the simple alignment and height adjustment of the threaded rod.
- The riveted version gives the ceiling hanger increased stability.
- The specified shape of the duct hangers allow an ideal adjustment to suit the pipe diameter.
- The design of the LRN / LRNB offers an alternative use as a sound-insulated profile hanger.

PROPERTIES

- **Material LRB:** steel DD11 (material no. 1.0332) acc. to DIN EN 10111
- **Zinc plating LRB:** electro zinc-plated, min. 3 µm
- **Material LRBN:** steel S235 JR (material no. 1.0037) acc. to DIN EN 10025
- **Zinc plating LRBN:** electro zinc-plated, min. 8 µm
- **Sound insulation:** for DIN 4109
- **Temperature range:** -50 °C to +110 °C
- **Hardness:** 45 ± 5° Shore A
- **Fire behaviour:** DIN 4102: Class B2

TECHNICAL DATA

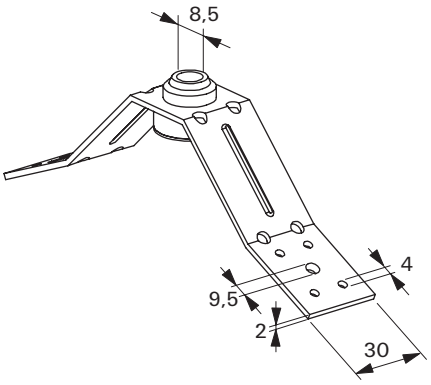

LRB

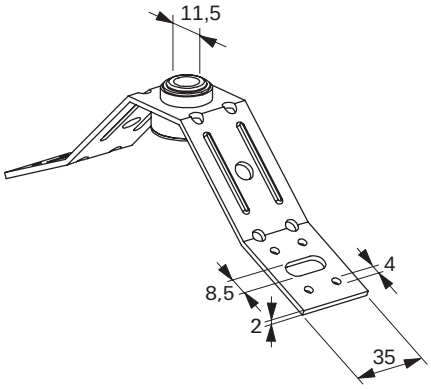

LRBN

Item	Art.-No.	For thread	Max. recom. statc load (centr. tension) [kN]	Sales unit [pcs]
LRB	**024675**	M 8	0.5	50
LRBN	**077613**	M 8 / M 10	0.9	50

Metal ceiling hanger - Profile hanger TZ / TZA / TZH

Suspended pipes on trapezoid roof

APPLICATIONS

- Fastening element for trapezoidal sheets (available in three versions)
- Sprinkler system version to be fixed with screw SKS M8x100 in punched hole
- Fixing of pipes with self drilling screws or steel blind rivets

ADVANTAGES/BENEFITS

- The VdS approval for TZ/TZH and the FM approval for the TZA guarantee independently tested safety.
- The TZH's adjustable nut allows a simple, post-iinstallation height adjustment.
- The specified bending points of the TZ/TZH/TZA allow the ideal adjustment to suit the shape of the trapezoidal sheet.

CERTIFICATES

VdS
G 410037 / G 410034

FM APPROVED
From thread M10.

PROPERTIES

- **Material:** steel DX51D+Z 140-275 (material no. 1.0226+Z) acc. to DIN EN 10327; DD11 acc. to DIN EN 10111
- **Zinc plating:** electro zinc-plated, ≧ 7 µm

TECHNICAL DATA

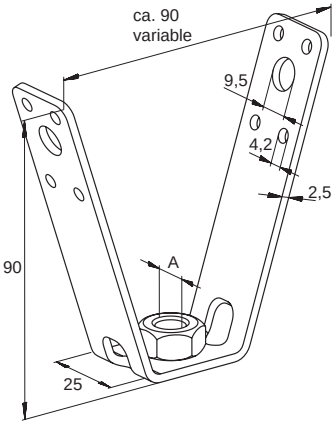

TZ

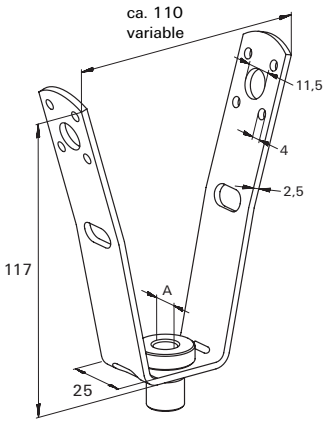

TZH

Item	Art.-No.	VdS approved	FM approved	Thread A	Max. recom. statc load (centr. tension) [kN]	Sales unit [pcs]
TZ M 8	064094	X	–	M 8	3.0	25
TZ M 10	064095	X	–	M 10	3.0	25
TZA M10	524047	–	X	M 10	3.0	50
TZH M 8	079825	X	–	M 8	4.0	25
TZH M 10	079826	X	–	M 10	4.0	25

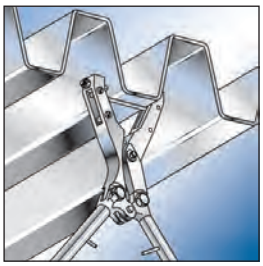
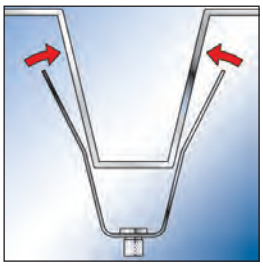
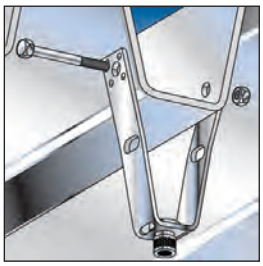
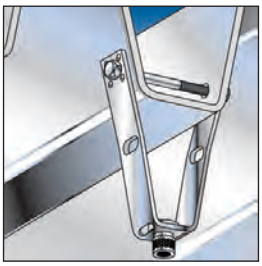
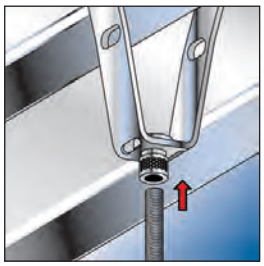

APPLICATIONS

- Tool for punching holes in steel sheets

PROPERTIES

- Usable for trapezoidal steel sheet with max. opening width between stamps of 67 mm
- Max. sheet thickness 1,25 mm

TECHNICAL DATA

Item	Art.-No.	Max. sheet thickness [mm]	Sales unit [pcs]
LZ	**079830**	1.25	1

TECHNICAL DATA

Item	Art.-No.	Sales unit [pcs]
LST 10	**079829**	2

SEE ALSO

SKS
see page 185

MU
see page 186

Fastening components - Rubber inlay EMS

Airduct with sound insulation on installation channel

APPLICATIONS

- Profile rubber to insert in channels
- Sound insulation of large ducting

ADVANTAGES/BENEFITS

- The channel rubber EMS provides sound insulation between components.
- The design of the rubber EMS allows it to be used in channels and threaded rods.

PROPERTIES

- **Material sound insulation:** SBR/EPDM chlorine-free and silicone-free
- **Sound insulation:** special noice-absorbing lining
- **Temperature range:** -50 °C to +110 °C
- **Hardness:** 45 ± 5° Shore A
- **Fire behaviour:** DIN 4102: Class B2

TECHNICAL DATA

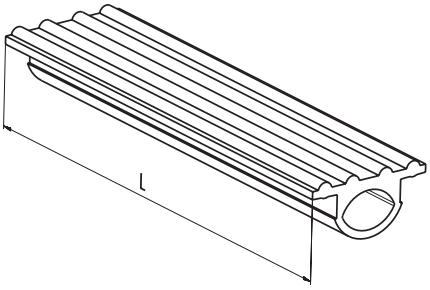

Item	Art.-No.	For profile	Length [m]	Sales unit [pcs]
EMS 31	**538752**	all FLS channels	25	1
EMS 41	**550806**	all FUS channels	6	1

fischer
innovative solutions

2g Accessories

	Page
BASE PLATES	
Base plate GPL	178
Base plate GPR	178
Double connector plate DPP, DPF	183
STEEL WORK CONNECTORS	
Clamp hanger TKL	172
Beam Clamp Steel TKLS Steel Bite	174
LEVEL ADJUSTMENT	
Turnbuckle SPS, Bolt left-hand/ right-hand BLR	184
Parallel connector PV	182
Support hanger AHB	180

	Page
THREADED CONNECTORS	
Multi connector MW	181
Threaded rod G / Threaded stud GS	176
Bolt connector SBB	184
Hexagonal nut MU	186
Washer U	185
Reduction pieces	187
Hexagonal screw SKS	185
Stud screw STST with bit head and Hex shank	179
Installation tool for stud screw HED	184
Hexagonal connector VM	186
Eyebolt AG	188
Thread hanger RAH	187
Reduction socket RDM and GRD	188
Flat eye screw LLS	188

	Page
STRAPS	
Textile web strapping GWB	189
Perforated steel banding LBV / LBK	190
Impact nail ED	191

Clamp hanger TKL

Heavy drainage pipe on beam clamp

APPLICATIONS

- Clamp hangers allow for simple fixing by clamping direct to steel girders
- Safety plates SS-TKL are required for VdS equipment over Ø 65 mm

ADVANTAGES/BENEFITS

- The TKL design with its clamping screw allows for fixing to steel girders without the need for welding and drilling.
- The design of the clamping screw prevents it from slipping from the steel girder.
- VdS/FM/UL certificates guaranty independently tested safety.
- The solid TKL design guarantees a high load-bearing capacity.
- The TKL with locking screw guarantees quick and easy installation.
- The TKL with through-hole allows for height adjustment after installation.

CERTIFICATES

VdS
G 410037 / G 410034

UL

FM APPROVED
From thread M10.

PROPERTIES

- **Material TKL:** malleable cast iron EN-GJMB-350-10 acc. to DIN 1562
- **Material bolt:** steel 8.8 acc. to ISO 4017
- **Material nut:** steel acc. to ISO 4035, Strength category 4
- **Material SS-TKL:** steel DX51D (material no. 1.0226) acc. to EN 10214
- **Zinc plating:** electro zinc-plated, min. 5 µm

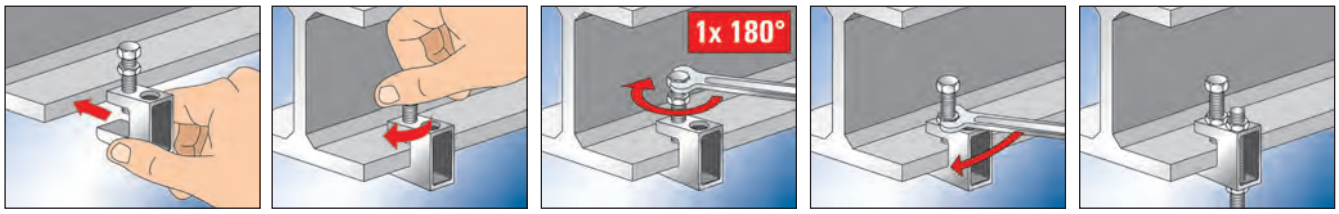

TECHNICAL DATA

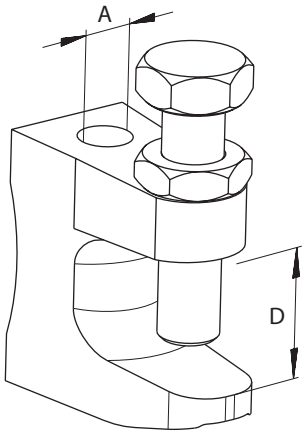

TKL

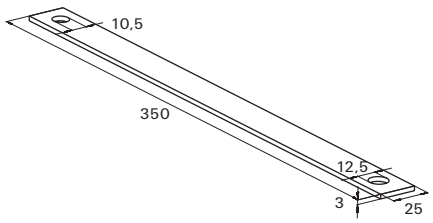

SS-TKL

Item	Art.-No.	VdS approved	FM approved	UL approved	Clamping range D [mm]	Thread A	Sales unit [pcs]
TKL L M 8	064055	X	–	–	0 - 18	M 8	50
TKL M 8	079687	X	–	–	0 - 23	M 8	50
TKL L Ø 9	077605	X	–	–	0 - 18	Ø 9	50
TKL M 10	079688	X	X	X	0 - 20	M 10	50
TKL Ø 11	079689	X	X	X	0 - 20	Ø 11	50
TKL M 12	020949	X	X	X	0 - 26	M 12	50
TKL Ø 13	043275	X	X	X	0 - 26	Ø 13	50
SS-TKL M10/M12	048154	X	–	–	–	Ø 10 / Ø 12	25

LOADS

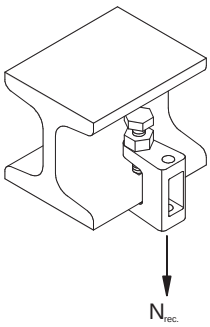

Item	Art.-No.	Max. recom. static load (centr. tension) $N_{recom.}$ [kN]	
TKL L M 8	064055	1.20	
TKL M 8	079687	2.50	
TKL L Ø 9	077605	1.20	
TKL M 10	079688	2.50	
TKL Ø 11	079689	2.50	
TKL M 12	020949	3.50	
TKL Ø 13	043275	3.50	

Beam Clamp allows simple fixing by hammering to steel beams

Heavy steel pipe suspended on steel beam

APPLICATIONS

- All kind of fixings by threaded rods to steel beams with sloping flange plate up to 14%
- Safety plates SS-TKL are required for VdS equipment over Ø 65 mm

ADVANTAGES/BENEFITS

- The TKLS design with hammering wedge allows fixing to steel beams without the need of welding and drilling.
- The teeth of the TKLS Steel Bite effectively prevent from slipping of the steel beam.
- VdS and FM approval guarantees objectively tested functional safety.
- The TKLS Steel Bite made of steel guarantees highest load-bearing capacity.
- The TKLS Steel Bite allows pre-assembling of threaded rods and for retrospective height adjustment.

CERTIFICATES

VdS G 414027

FM APPROVED From thread M10.

PROPERTIES

- **TKLS: material:** steel HX420LAD+ZAD, material no. 1.0935, DIN EN 10346
- **TKLS: Zinc plating:** electro zinc-plated, min. 7 µm
- **SS-TKL: Material:** steel DX51D acc. to EN 10214, material no.1.0226
- **SS-TKL: Zinc plating:** electro zinc-plated, min. 5 µm

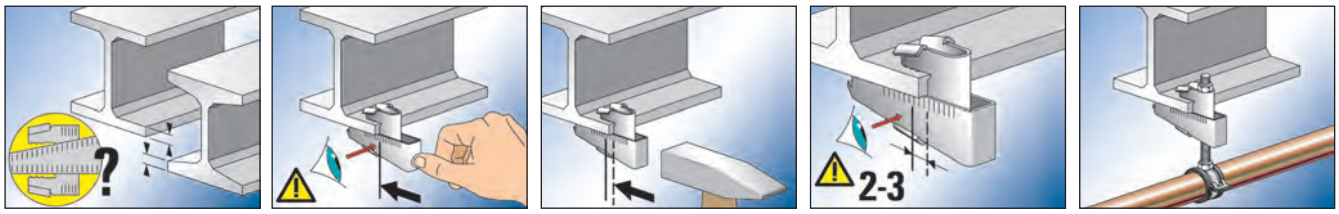

TECHNICAL DATA

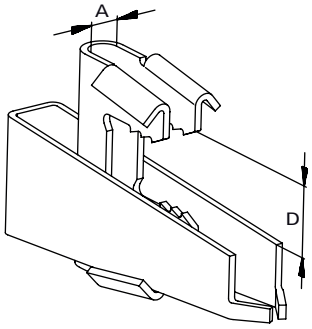

TKLS

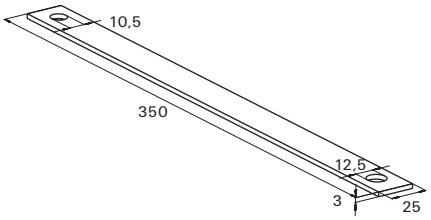

SS-TKL

Item	Art.-No.	VdS approved	FM approved	Hole-Ø A [mm]	Clamping range D [mm]	Sales unit [pcs]
TKLS Ø 9	**531134**	X	–	9	8 - 20	25
TKLS Ø 11	**531136**	X	X	11	8 - 20	25
TKLS Ø 13	**531137**	X	X	13	8 - 20	25
TKLS Ø 17	**531138**	X	X	17	11 - 26	16
SS-TKL M10/M12	**048154**	X	–	–	–	25

LOADS

Item	Art.-No.	Max. recom. static load (centr. tension) $N_{recom.}$ [kN]	Max. recom. pipe-Ø acc. VDS CEA 4001
TKLS Ø 9	**531134**	2.00	≤ DN 50
TKLS Ø 11	**531136**	3.50	> DN 50 ≤ DN 100
TKLS Ø 13	**531137**	5.00	> DN 100 ≤ DN 200
TKLS Ø 17	**531138**	10.00	> DN 200 ≤ DN 250

Threaded rod G / Threaded stud GS

PROPERTIES

- **Material threaded rod G (G 6 - G 24):** DIN 976 steel 4.8 acc. to DIN EN ISO 898-1
- **Material threaded pipe G (G 1/2" - G 3/4"):** steel S235 JR (material no. 1.0037) acc. to DIN EN 10025
- **Material threaded stud GS:** DIN 976 Steel 4.6 acc. to DIN EN ISO 898-1
- **Zinc plating:** electro zinc-plated, min. 3 µm

TECHNICAL DATA

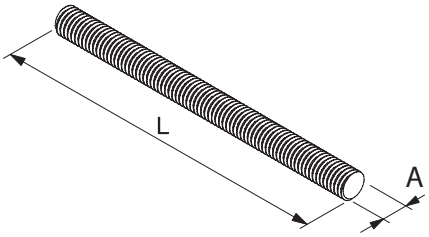

Item	Art.-No.	Length l [mm]	Thread A	Sales unit [pcs]
G 6	020956	1000	M 6	50
G 8	079740	1000	M 8	25
G 10	079744	1000	M 10	25
G 12	020957	1000	M 12	20
G 16	020958	1000	M 16	10
G 20	557295	1000	M 20	5
G 24	557270	1000	M 24	5
G 8/2	079741	2000	M 8	25
G 10/2	079745	2000	M 10	25
G 12/2	579746	2000	M 12	25
G 10/3	557092	3000	M 10	5
G 12/3	064056	3000	M 12	5
G 1/2"	064093	2000	1/2"	10
G 3/4"	077580	2000	3/4"	5
GS 6/25	544589	25	M 6	100
GS 6/40	544590	40	M 6	100
GS 6/50	544591	50	M 6	100
GS 6/70	544592	70	M 6	100
GS 6/80	544593	80	M 6	100
GS 6/100	544594	100	M 6	100
GS 8/25	079750	25	M 8	100
GS 8/40	079751	40	M 8	100
GS 8/50	079752	50	M 8	100
GS 8/60	079753	60	M 8	100
GS 8/70	079754	70	M 8	100
GS 8/80	079755	80	M 8	100
GS 8/100	079757	100	M 8	100
GS 8/120	535535	120	M 8	50
GS 8/150	079758	150	M 8	50
GS 8/180	535536	180	M 8	50
GS 8/200	079759	200	M 8	50
GS 10/25	079765	25	M 10	100
GS 10/40	079766	40	M 10	100
GS 10/60	079767	60	M 10	100
GS 10/80	079768	80	M 10	100

TECHNICAL DATA

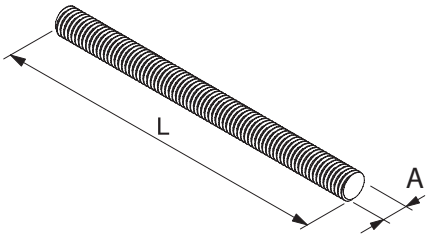

Item	Art.-No.	Length l [mm]	Thread A	Sales unit [pcs]
GS 10/100	**079769**	100	M 10	100
GS 10/120	**079770**	120	M 10	50
GS 10/150	**079771**	150	M 10	50
GS 10/200	**079772**	200	M 10	50
GS 12/40	**091442**	40	M 12	100
GS 12/60	**091443**	60	M 12	100
GS 12/80	**091444**	80	M 12	100
GS 12/100	**091461**	100	M 12	100
GS 12/120	**091462**	120	M 12	50
GS 12/150	**091463**	150	M 12	50
GS 12/200	**091464**	200	M 12	50

RECOMMENDED LOAD

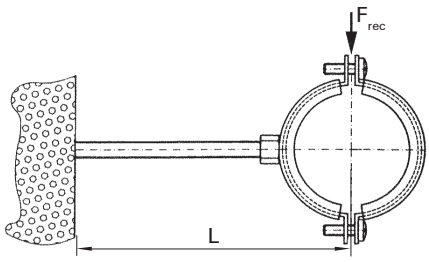

Maximum deflection under load: $f_{max} \leq 3$ mm
Permissible steel tension: $\delta_{ad.} = 160$ N/mm²

THREADED RODS (4.6)

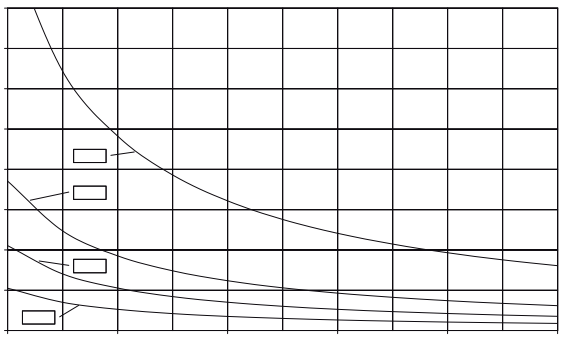

THREADED PIPES

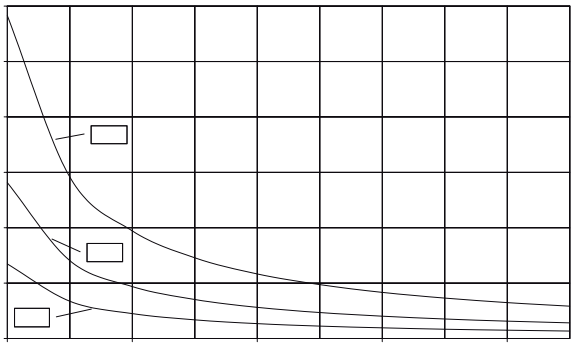

Base plate GPL

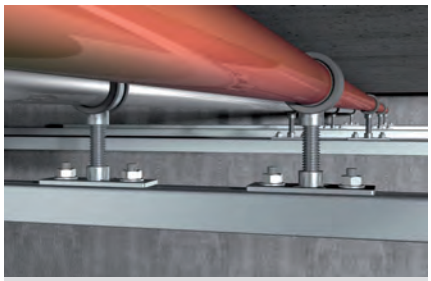

Baseplate on installation channel

Plastic pipe with fixpoint installation

APPLICATIONS

- Base plate in a light, heavy and round version with welded-on threaded sleeve

ADVANTAGES/BENEFITS

- The base plate´s slots allow easy alignment.

PROPERTIES

- **Material:** steel DD11 (material no. 1.0332) acc. to DIN EN 10111
- **Zinc plating:** electro zinc-plated, min. 8 µm

TECHNICAL DATA

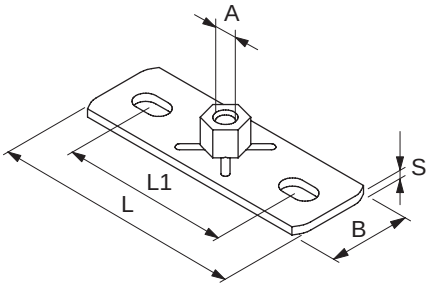

GPL / GPS

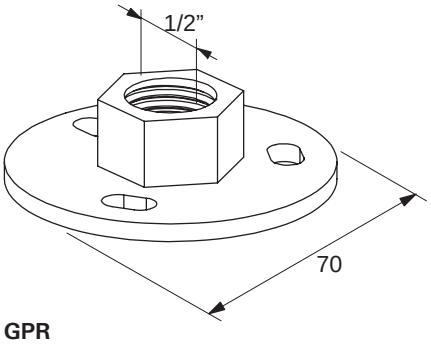

GPR

Item	Art.-No.	Thread A	Length l [mm]	Width B B [mm]	Hole spacing L1 [mm]	Slot L x s [mm]	Thickness S [mm]	Sales unit [pcs]
GPL M 8	**079665**	M 8	80	30	54	9 x 16	3	25
GPL M 10	**079666**	M 10	80	30	54	9 x 16	3	25
GPL 1/2"	**079667**	1/2"	80	30	54	9 x 16	3	25
GPS M 10	**079671**	M 10	120	40	79	11 x 19	4	25
GPS M 12	**040398**	M 12	120	40	79	11 x 19	4	25
GPS M 16	**504408**	M 16	120	40	79	11 x 19	4	25
GPS 1/2"	**079672**	1/2"	120	40	79	11 x 19	4	25
GPS 3/4"	**020968**	3/4"	120	40	79	11 x 19	4	25
GPR 1/2"	**037289**	1/2"	–	–	–	11 x 7	4	25

LOADS

Item	Art.-No.	Max. recom. static load (centr. tension) $N_{recom.}$ [kN]	
GPL M 8	**079665**	2.40	
GPL M 10	**079666**	2.40	
GPL 1/2"	**079667**	2.40	
GPS M 10	**079671**	4.00	
GPS M 12	**040398**	4.00	
GPS M 16	**504408**	4.00	
GPS 1/2"	**079672**	4.00	
GPS 3/4"	**020968**	4.00	
GPR 1/2"	**037289**	4.00	

Stud screw STST with torx

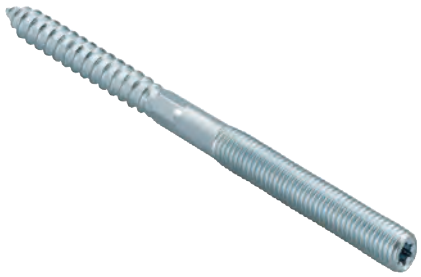

APPLICATIONS

- Threaded connectors stud screw STST
- Wood and metric screw combination for direct installation of clamps onto a wall

ADVANTAGES/BENEFITS

- Fixing with a Nylon plug to brick or direct into timber construction is simple with the torx drive or the integrated hexagon.

PROPERTIES

- **Material:** steel 4.6 acc. to DIN EN ISO 898-1
- **Zinc plating:** electro zinc-plated, min. 3 µm

TECHNICAL DATA

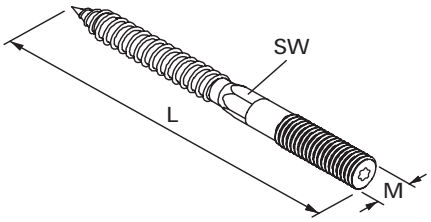

Item	Art.-No.	Length l [mm]	Thread M	Drive	Width across nut ⬡ SW [mm]	Sales unit [pcs]
STST 6 x 60	**504400** 1)	60	M 6	T15	–	100
STST 6 x 80	**077714** 1)	80	M 6	T15	–	100
STST 8 x 50	**079780** 1)	50	M 8	T25	–	100
STST 8 x 60	**079781**	60	M 8	T25	6	100
STST 8 x 80	**079782**	80	M 8	T25	6	100
STST 8 x 100	**079783**	100	M 8	T25	6	100
STST 8 x 120	**079784**	120	M 8	T25	6	100
STST 8 x 140	**079785**	140	M 8	T25	6	50
STST 8 x 180	**079786**	180	M 8	T25	6	50
STST 10 x 60	**077689**	60	M 10	T25	8	100
STST 10 x 80	**077707**	80	M 10	T25	8	100
STST 10 x 100	**077708**	100	M 10	T25	8	100
STST 10 x 120	**077709**	120	M 10	T25	8	100
STST 10 x 140	**077711**	140	M 10	T25	8	50
STST 10 x 180	**077712**	180	M 10	T25	8	50
STST 12 x 100	**535541**	100	M 12	T30	10	100
STST 12 x 160	**535542**	160	M 12	T30	10	50

1) without hex shank

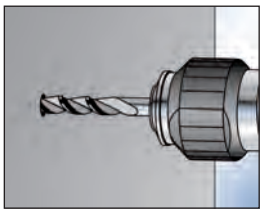
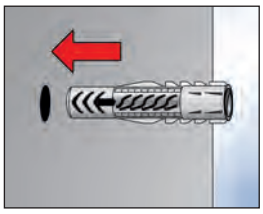
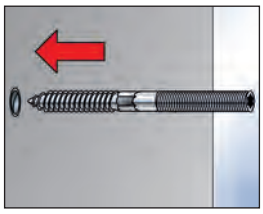
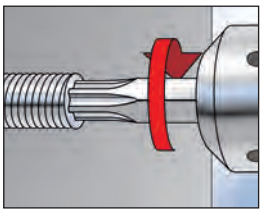
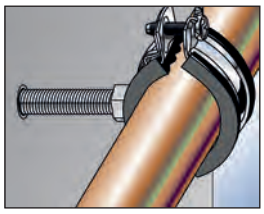

Support hanger AHB

Height adjustable pipe installation

APPLICATIONS

- Component for height adjustment
- A washer should be used when using size M8 threaded rods
- Use of washer when using threaded rods of size M8

ADVANTAGES/BENEFITS

- The seat of the support hanger allows subsequent height regulation at any time.
- The base plate's long slot allows the support hanger to be easily aligned.
- The perforated opening means that a component can be simply hung and adjusted using a threaded rod and nut.

PROPERTIES

- **Material:** steel DD11 (material no. 1.0332) acc. to DIN EN 10111
- **Zinc plating:** electro zinc-plated, min. 5 µm

TECHNICAL DATA

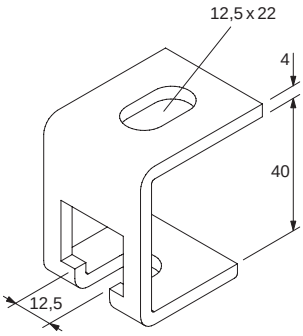

Item	Art.-No.	For thread	Sales unit [pcs]
AHB	**079675**	M8, M10, M12	25

LOADS

Item	Art.-No.	Max. recom. static load (centr. tension) $N_{recom.}$ [kN]	
AHB	**079675**	1.20	

Multi connector MW

Fixation with multi-connector

APPLICATIONS

- Cube with four threaded drill holes for simple connection
- Ideal for connecting threaded rod and bolts at 90°

ADVANTAGES/BENEFITS

- The design of the mounting cube provides flexibility when it comes to connecting pipe clamps or threaded rods.
- The mounting cube allows for the simultaneous fixing of 3 pipelines.

PROPERTIES

- **Material:** diecasting

TECHNICAL DATA

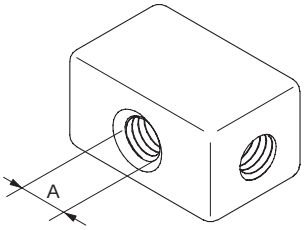

Item	Art.-No.	Thread A	Sales unit [pcs]
MW M 8	**079717**	M 8	50

LOADS

Item	Art.-No.	Max. recom. static load (centr. tension) $N_{recom.}$ [kN]	
MW M 8	**079717**	2.50	

Parallel connector PV

Braced cantilever arm

APPLICATIONS

- Simple, quick-mount connector for extending and connecting threaded rods
- Parallel connector for extending threaded rods
- Secure using locking nut

ADVANTAGES/BENEFITS

- The parallel connector's design allows the threaded rods to be installed quickly.
- Designed for simple and fast height adjustment.
- The PV allows the height to be adjusted during installation.

PROPERTIES

- **Material:** diecast

TECHNICAL DATA

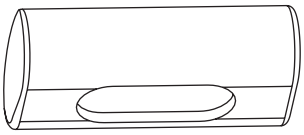

Item	Art.-No.	For thread	Sales unit [pcs]
PV M 6	**020947**	M 6	100
PV M 8	**079678**	M 8	100

LOADS

Item	Art.-No.	Max. recom. static load (centr. tension) $N_{recom.}$ [kN]	
PV M 6	**020947**	0.30	
PV M 8	**079678**	2.00	

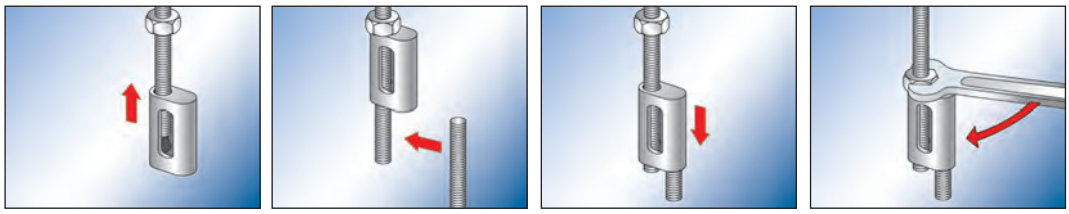

Double connector plate DPP, DPF

APPLICATIONS

- Fastening element for the installation of two parallel pipelines with just one fastening point

ADVANTAGES/BENEFITS

- The double connector plate design saves a fastening point for the fastening of two pipelines.
- The two-part double connector plate DPF is suitable for variable pipe spacing.
- The base plate's long slots allow the double connector plate to be easily aligned.
- The rounded design of the connector plate is ideal for a visual installation.

PROPERTIES

- **Material DPP:** DC04 (material no. 1.0338) acc. to DIN EN 10130
- **Material DPF:** DC01 (material no. 1.0330) acc. to DIN EN 10130
- **Zinc plating:** electro zinc-plated, min. 5 µm

TECHNICAL DATA

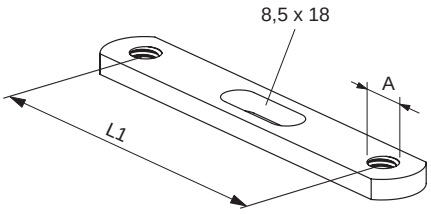

DPP

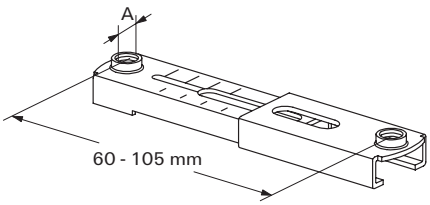

DPF

Item	Art.-No.	Length L_1 [mm]	Thread A	Sales unit [pcs]
DPP 65	**079702**	65	M 8	50
DPP 85	**079703**	85	M 8	50
DPP 105	**079704**	105	M 8	50
DPF 60 - 105	**024648**	60 - 105	M 8	50

LOADS

Item	Art.-No.	Max. recom. static load (centr. tension) $N_{recom.}$ [kN]	
DPP 65	**079702**	1.50	
DPP 85	**079703**	1.00	
DPP 105	**079704**	0.75	
DPF 60 - 105	**024648**	1.5 - 0.5	

Bolt connector SBB

TECHNICAL DATA

Bolt connector **SBB**

PROPERTIES

- **Material:** steel S235 JR (material no.: 1.0037) acc. to DIN EN 10025
- **Zinc plating:** electro zinc-plated, min. 8 µm

Item	Art.-No.	Length l [mm]	Thread A	Sales unit [pcs]
SBB 35	**079705**	35	M 8	100
SBB 45	**079706**	45	M 8	100
SBB 55	**079707**	55	M 8	100

Installation tool for stud screw HED

TECHNICAL DATA

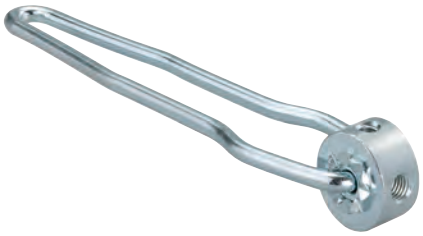

Installation tool **HED**

APPLICATIONS

- Tool for installing stud screws STST
- 4 thread sizes in 1 tool

Item	Art.-No.	Thread M	Sales unit [pcs]
HED	**079831**	M6, M8, M10, M12	1

Turnbuckle SPS, Bolt left-hand/right-hand BLR

TECHNICAL DATA

Turnbuckle **SPS**, Bolt left-hand/right-hand **BLR**

PROPERTIES

- **Material SPS:** steel ≧ 330 N/mm² acc. to DIN 1480
- **Material BLR:** steel acc. to DIN 976, resistance 4.6
- **Zinc plating:** electro zinc-plated, min. 5 µm

Item	Art.-No.	Length l [mm]	Thread M	Max. recom. static load (centr. tension) $N_{recom.}$ [kN]	Sales unit [pcs]
SPS M 10	**537211**	125	M 10	10.00	25
BLR 100 M10	**537210**	100	M 10	10.00	25
SPS M 12	**064090**	125	M 12	15,00	25
BLR 100 M12	**064091**	100	M 12	15,00	25

Hexagonal screw SKS

TECHNICAL DATA

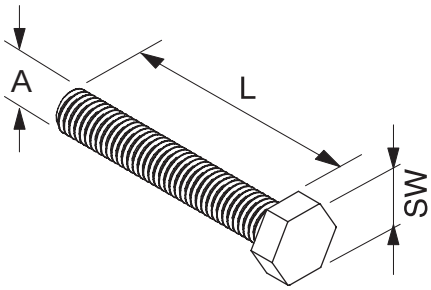

Hexagonal bolt **SKS**

PROPERTIES

- **Material:** steel acc. to DIN-EN-ISO 4017, steel 8.8
- **Zinc plating:** electro zinc-plated, min. 3 µm

Item	Art.-No.	Length L [mm]	Thread A	Width across nut [mm]	Sales unit [pcs]
SKS 6 x 20	**079711**	20	M 6	10	100
SKS 8 x 16	**079415**	16	M 8	13	100
SKS 8 x 30	**079713**	30	M 8	13	100
SKS 8 x 45	**079714**	45	M 8	13	100
SKS 8 x 55	**079715**	55	M 8	13	100
SKS 8 x 100	**079827**	100	M 8	13	100
SKS 10 x 20	**079416**	20	M 10	17	100
SKS 10 x 30	**079417**	30	M 10	17	100
SKS 10 x 55	**079721**	55	M 10	17	100
SKS 10 x 65	**535537**	65	M 10	17	50
SKS 10 x 85	**505552**	85	M 10	17	100
SKS 12 x 25	**535538**	25	M 12	19	100
SKS 12 x 65	**535539**	65	M 12	19	50
SKS 12 x 85	**505553**	85	M 12	19	100

Washer U

TECHNICAL DATA

Washer **U**

PROPERTIES

- **Material:** steel acc. to DIN 10139
- **Zinc plating:** electro zinc-plated, min. 3 µm

Item	Art.-No.	Thickness S [mm]	Hole-Ø D [mm]	External-Ø d [mm]	Sales unit [pcs]
U 6 x 12	**544595**	1.6	6.4	12	100
U 8 x 17	**091477**	1.6	8.4	17	100
U 8 x 28	**079725**	2	8.4	28	100
U 8 x 40	**079729**	3	8.4	40	100
U 10 x 21	**091478**	2	10.5	21	100
U 10 x 28	**079726**	2	10.5	28	100
U 10 x 40	**079730**	3	10.5	40	100
U 12 x 24	**557301**	2.5	12.5	24	100
U 12 x 40	**024649**	3	12.5	40	100
U 16 x 30	**557303**	3	16.5	30	50
U 16 x 40	**535540**	3	17	40	50

Hexagonal nut MU

TECHNICAL DATA

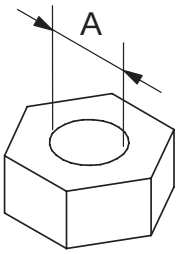

PROPERTIES

- **Zinc plating:** electro zinc-plated, 3 - 8 µm
- **Quality:** acc. DIN 934, resistance class 8

Hexagonal nut **MU**

Item	Art.-No.	Thread A	Width across nut ⬡ SW [mm]	Sales unit [pcs]
MU M 6	**079733**	M 6	10	100
MU M 8	**079734**	M 8	13	100
MU M 10	**079735**	M 10	17	100
MU M 12	**024650**	M 12	19	100
MU M 16	**557297**	M 16	24	50
MU M 20	**535532**	M 20	30	15
MU M 24	**535534**	M 24	36	15

Hexagonal connector VM

TECHNICAL DATA

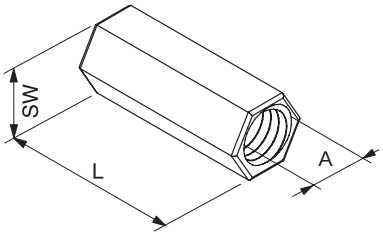

PROPERTIES

- **Material:** SAE 1008 (material no. 1.0213) acc. to DIN EN 10263-2
- **Zinc plating:** electro zinc-plated, 3 - 8 µm

Hexagonal connector **VM**

Item	Art.-No.	Length L [mm]	Thread A	Width across nut [mm]	Sales unit [pcs]
VM M 6	**014319**	25	M 6	10	100
VM M 8	**079690**	30	M 8	11	100
VM M 10	**079691**	30	M 10	13	100
VM M 12	**020971**	40	M 12	17	100
VM M 16	**508833**	40	M 16	24	50

Eyebolt AG

TECHNICAL DATA

PROPERTIES

- **Material:** steel S235 JR (material no.: 1.0037) acc. to DIN EN 10025
- **Zinc plating:** electro zinc-plated, 3 - 8 µm

Eyebolt **AG**

Item	Art.-No.	Length l [mm]	Thread A	Eye-Ø D [mm]	Max. recom. static load (centr. tension) $N_{recom.}$ [kN]	Sales unit [pcs]
AG 8 x 25	**079696**	25	M 8	8.5	5.00	100
AG 10 x 25	**079697**	25	M 10	12.0	8.00	100

Thread hanger RAH

TECHNICAL DATA

Thread hanger **RAH**

Item	Art.-No.	Thread A	Eye-Ø D [mm]	Max. recom. static load (centr. tension) $N_{recom.}$ [kN]	Sales unit [pcs]
RAH M 8	**079698**	M 8	12.0	4.00	50
RAH M 10	**079699**	M 10	12.0	4.00	50

PROPERTIES

- **Material:** malleable cast iron GJMB 350-10 acc. to DIN 1562
- **Zinc plating:** electro zinc-plated, 3 - 8 µm

Reduction piece RD

TECHNICAL DATA

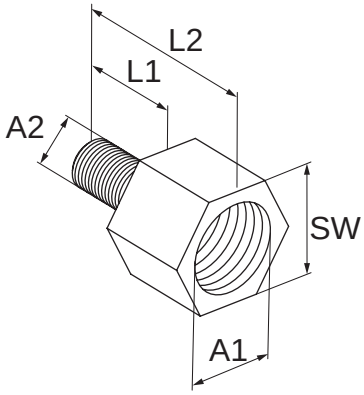

Reduction piece **RD**

Item	Art.-No.	Internal thread A1	External thread A 2	Length L_1 [mm]	Length L_2 [mm]	Width across nut ⬡ SW [mm]	Sales unit [pcs]
RD M 6 / M 8	**079694**	M 6	M 8	8,5	20	13	100
RD M 8 / M 6	**020936**	M 8	M 6	7	19	13	100
RD M 10 / M 8	**079692**	M 10	M 8	8	23	13	50
RD M 12 / M 10	**079693**	M 12	M 10	10	25	17	100
RD M 12 / M 16	**504397**	M 12	M 16	14	32	19	50
RD M 16 / M 12	**504399**	M 16	M 12	10	32	24	50
RD 1/2" / M10	**079695**	1/2"	M 10	10	29	24	10
RD M 16 / M 12 long	**538080**	M 16	M 12	25	46.5	24	10
RD 1/2" / M10 long	**537215**	1/2"	M 10	20	39	24	10
RD 3/4" / M 12 long	**537213**	3/4"	M 12	25	46.5	30	10
RD 3/4" / M 16 long	**537214**	3/4"	M 16	25	46.5	30	10

PROPERTIES

- **Material:** 11SMnPb30 (material no. 1.0718) acc. to DIN EN 10087
- **Zinc plating:** electro zinc-plated, 3 - 8 µm

Reduction socket RDM and GRD

TECHNICAL DATA

Reduction socket **RDM**

Reduction socket **GRD**

PROPERTIES

- **Material RDM:** SAE 1008
- **Material GRD:** 11SMnPb30 (material no. 1.0718) acc. to DIN EN 10277
- **Zinc plating:** electro zinc-plated, 3 - 8 µm

Item	Art.-No.	Thread A	Thread A2	Sales unit [pcs]
RDM M 10 / M 8	**079413**	M 8	M 10	50
RDM M 12 / M 10	**079414**	M 10	M 12	100
GRD 1/2'' / M 10	**077609**	1/2"	M 10	100
GRD 1/2'' / M 12	**077608**	1/2"	M 12	100
GRD 3/4'' / M 10	**077607**	3/4"	M 10	100
GRD 3/4'' / M 12	**077606**	3/4"	M 12	100

Flat eye screw LLS

TECHNICAL DATA

Flat eye screw **LLS**

PROPERTIES

- **Material:** steel S235 JR (material no.: 1.0037) acc. to DIN EN 10025
- **Zinc plating:** electro zinc-plated, 3 - 8 µm

Item	Art.-No.	Length L [mm]	Thread [mm]	Eye-Ø [mm]	Sales unit [pcs]
LLS 6 x 50	**079700**	50	6	8.5	100
LLS 8 x 50	**079701**	50	8	10.5	100

Textile web strapping GWB

APPLICATIONS

- Tear-proof textile tape for simple and load-bearing installation
- Fixing to concrete using the fischer impact nail ED

ADVANTAGES/BENEFITS

- Pipe fastening using textile tape allows cheap and simple installation.
- The textile tape roll allows the correct tape length to be chosen to suit the diameter in question.
- Hangings with textile tape are a fast solution for temporary fixings.

PROPERTIES

- **Material:** polypropylene

TECHNICAL DATA

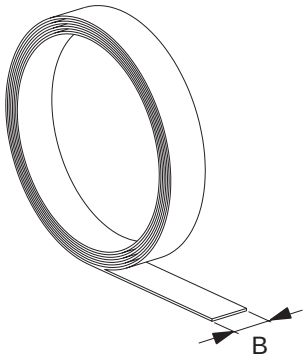

Item	Art.-No.	Total length [mm]	Width [mm]	Thickness S [mm]	Sales unit [pcs]
GWB	**020959**	10000	15	1.1	10

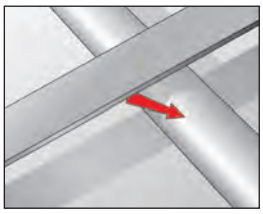
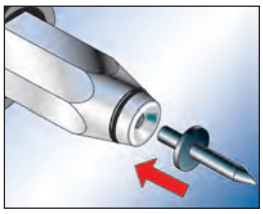
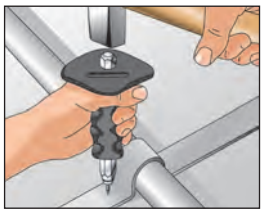
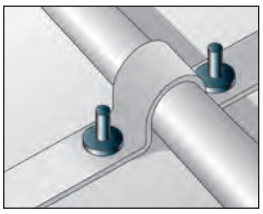

Perforated steel banding LBV / LBK

APPLICATIONS

- Steel tape with stamped holes for simple installation; available zinc-plated LBV or plastic-covered LKB
- The fischer nail anchor FNA II is suitable for ceiling fixing in concrete
- Use fischer thread hanger RAH for fastening to threaded rods

ADVANTAGES/BENEFITS

- The perforated tape's material thicknesses and plastic covering allows the tapes to be easily cut to size using metal shears.
- The perforated tape's hole geometry enables concrete fixing using the fischer impact nail ED.

PROPERTIES

- **Material:** steel DX51D+Z (material no. 1.0226) acc. to DIN EN 10327
- **Zinc plating:** electro zinc-plated, min. 7 µm
- **Protective coating LBK:** PE

TECHNICAL DATA

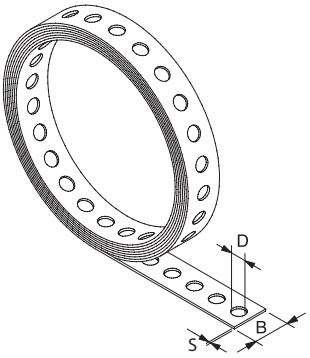

Item	Art.-No.	Total length l [mm]	Width B B [mm]	Thickness S S [mm]	Eye-Ø D D [mm]	Sales unit [pcs]
LBV 12	**079549**	10000	12	0.75	5	10
LBV 17	**079550**	10000	17	0.75	6.5	10
LBV 25	**079551**	10000	25	0.88	8.5	8
LBK 14	**079553**	10000	14	2.6	5	10
LBK 19	**079554**	10000	19	2.4	6.5	8
LBK 27	**079555**	10000	27	2.4	8.5	5

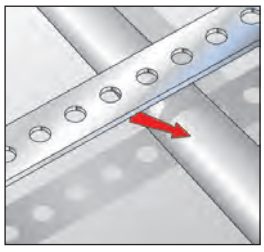
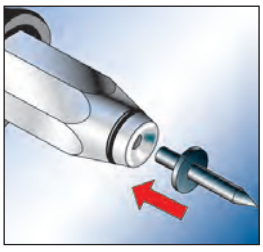
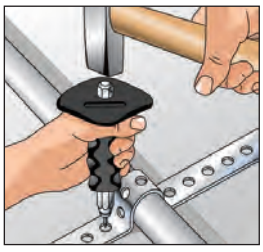
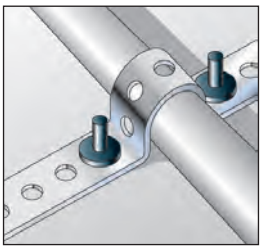

Fixing in concrete without pre-drilling

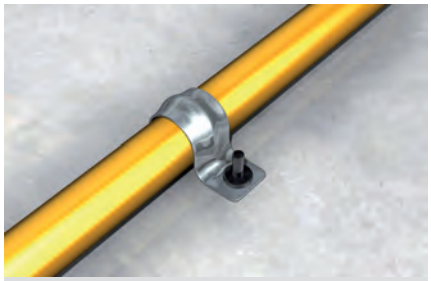

Fixing armoured conduits

Fixing perforated tapes

BUILDING MATERIALS

- Concrete

ADVANTAGES

- The stable impact nail ED can be set in concrete with the impact nail setting tool SZE without pre-drilling. This allows for a fast installation.
- The setting tool SZE impact protection provides the best protection for your hand, thus ensuring a safe installation.

APPLICATIONS

For fixing of:

- Conduit clips such as BSM, BSMD, BSMZ
- Perforated band such as LBK, LBV

FUNCTIONALITY

- The impact nail ED is set in the setting tool SZE.
- The bracket in the setting tool holds the nail securely in place during the installation procedure.
- Pre-positioning of the element to be fixed.
- The nail can be hammered through the fixing element directly into the concrete (not older than 6 months).

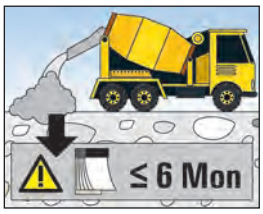

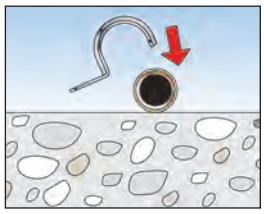

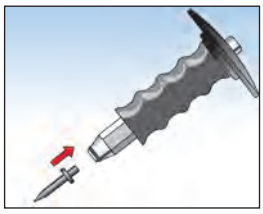

Impact nail ED

TECHNICAL DATA

Impact nail **ED**

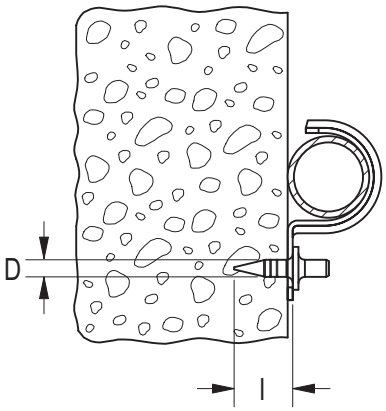

Item	Art.-No.	Length l [mm]	Diameter d [mm]	Sales unit [pcs]				
ED 15	**048212**	15	4.0	200				
ED 18	**079815**	18	4.0	200				
ED 22	**014570**	22	4.0	200				

TECHNICAL DATA

Impact nail setting tool **SZE**

Toolset for **SZE**

Item	Art.-No.	Sales unit [pcs]						
SZE	**079820**	1						
Toolset for SZE	**043365**	4						

fischer
innovative solutions

3 Installations system FUS hot-dip galvanised

	Page
PIPE CLAMPS	
Pipe clamp FRS zl	196
SUSPENDED MOUNTING RAILS	
Channel FUS hdg.	198
CONSOLES	
Cantilever arm FCA hdg.	204
Large cantilever arm FCAM hdg.	207
Cover cap FEC	208
CONNECTORS	
Push-through connector PFCN 41 zl	209
Connector FCN Clix P hdg. / FCN Clix M hdg.	221
Channel washer HK 41 hdg.	223
CONSTRUCTION ELEMENTS	
Channel connector FUF OC hdg. and PFUF OC zl	203
Saddle flange PSF zl	211
Universal bracket PUWS zl	212
Angle bracket PWK zl	213
Variable bracket PVB zl	214
Bracing elements PSAE zl	215
Bracket PFFF zl	217
Bracket PFAF zl	218
Bracket PFUF zl	219
Brackets PFUF D zl	220
Saddle flange SF hdg.	224
Mounting bracket UWS hdg.	225
Angle bracket WK hdg.	226
Bracket FFF hdg.	232
Mounting bracket FAF fvz	234
Flanges FUF hdg.	235
Variable bracket VB hdg.	228
Threaded rod bracket FSB 45° hdg.	229
Beam clamp TKR hdg.	230
ACCESSORIES	
Threaded rod G hdg.	237
Washer U hdg.	237
Hexagonal nut MU hdg.	238
Hexagonal screw SKS hdg.	238

FRS zl pipe clamp with high corrosion protection

Height adjustable pipe installation

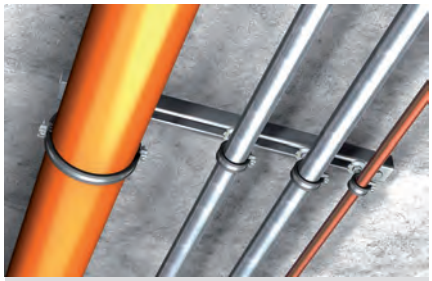

Drainage pipe assembly

APPLICATIONS

- Secure fixing for pipes with threaded rods or stud screws (also when there are fire protection requirements)
- For indoor and outdoor applications and in environments with high stress to components due to corrosion

ADVANTAGES/BENEFITS

- The fire test report guarantees independently tested functional safety.
- The two screws allow an easy adjustment to suit the outer pipe diameter.
- The combination connecting nut with thread M8/M10 enables optimised mounting choices.
- The sound insulation insert offers noise protection and prevents contact corrosion.
- The screw's safety feature ensures trouble-free installation.
- The surface coating creates a high corrosion protection against environmental influences like humidity, water, saltwater or other corrosive substances.

CERTIFICATES

Fire resistance classification R 120 according DIN EN 1363-1

MLAR R 30

sound insulation tested

PROPERTIES

- **Material:** steel DC01 (material no. 1.0330) acc. to DIN EN 10130
- **Coating**: Zinclamella acc. to DIN EN ISO 10683 or 13858, min. 15 µm
- **Connecting nut:** resistance welded, M8 / M10, SW 13
- **Locking screw:** flat head screw with combination recessed head
- **Material sound insulation insert:** EPDM; chlorine-free; silicone-free
- **Sound insulation:** for DIN 4109
- **Temperature range:** -40 °C to +100 °C
- **Hardness:** 55 ± 5° Shore A
- **Fire behaviour:** DIN 4102: Class B2

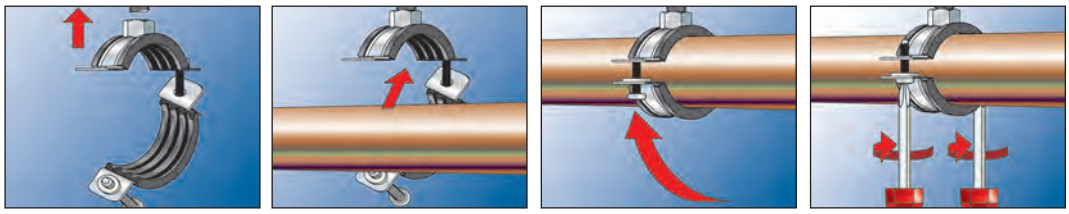

TECHNICAL DATA

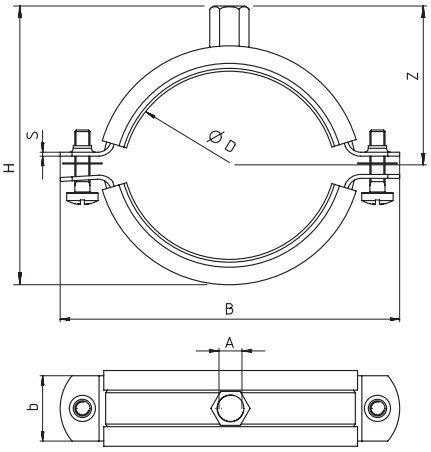

Item	Art.-No.	Fire test report	Thread A	Size [inch]	Clamping range D [mm]	Width B B [mm]	Height H H [mm]	Width x thickness clamp band b x s [mm]	Height Z Z [mm]	Locking screw	Max. re-com. static load (centr. tension) $N_{recom.}$ [kN]	Sales unit [pcs]
FRS 12 - 15 M8/M10 zl	**537981**	X	M 8 / M 10	1/4"	12 - 15	55	39	20 x 1.25	31	M 6	1.00	100
FRS 15 - 19 M8/M10 zl	**537982**	X	M 8 / M 10	3/8"	15 - 19	59	43	20 x 1.25	29	M 6	1.00	100
FRS 20 - 24 M8/M10 zl	**537983**	X	M 8 / M 10	1/2"	20 - 24	65	48	20 x 1.25	32	M 6	1.00	100
FRS 25 - 30 M8/M10 zl	**537984**	X	M 8 / M 10	3/4"	25 - 30	72	54	20 x 1.25	35	M 6	1.00	100
FRS 32 - 37 M8/M10 zl	**537985**	X	M 8 / M 10	1"	32 - 37	77	61	20 x 1.25	38	M 6	1.00	100
FRS 40 - 45 M8/M10 zl	**537986**	X	M 8 / M 10	1 1/4"	40 - 45	89	69	20 x 1.25	42	M 6	1.00	50
FRS 48 - 54 M8/M10 zl	**537987**	X	M 8 / M 10	1 1/2"	48 - 54	99	78	20 x 1.25	46	M 6	1.00	50
FRS 55 - 61 M8/M10 zl	**537988**	X	M 8 / M 10	2"	55 - 61	105	85	20 x 1.25	50	M 6	1.00	50
FRS 63 - 67 M8/M10 zl	**537989**	X	M 8 / M 10	–	63 - 67	111	91	20 x 1.25	53	M 6	1.00	50
FRS 72 - 80 M8/M10 zl	**537990**	X	M 8 / M 10	2 1/2"	72 - 80	125	104	20 x 2.0	60	M 6	1.50	25
FRS 87 - 92 M8/M10 zl	**537991**	X	M 8 / M 10	3"	87 - 92	137	116	20 x 2.0	66	M 6	1.50	25
FRS 108 - 116 M8/M10 zl	**537992**	X	M 8 / M 10	4"	108 - 116	164	140	25 x 2,0	78	M 6	2.00	20
FRS 121 - 128 M8/M10 zl	**537993**	X	M 8 / M 10	–	121 - 128	176	152	25 x 2.5	84	M 6	2.50	10
FRS 133 - 141 M8/M10 zl	**537994**	X	M 8 / M 10	5"	133 - 141	187	165	25 x 2.5	90	M 6	2.50	10
FRS 159 - 165 M8/M10 zl	**537995**	X	M 8 / M 10	–	159 - 165	211	198	25 x 2.5	102	M 6	2.50	8
FRS 165 - 168 M8/M10 zl	**537996**	X	M 8 / M 10	6"	165 - 168	225	192	25 x 2.5	104	M 6	2.50	8

The universal and complete mounting channel system for a wide range of applications

3D-frame constructions

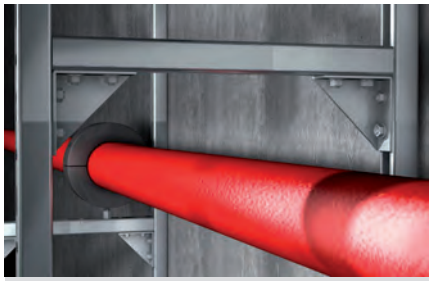

Solid frame construction

APPLICATIONS

- Creation of secure, horizontal and vertical installations
- Fast and efficient fixing of pipelines and supporting structures
- For indoor and outdoor applications and in environments with high stress to components due to corrosion

ADVANTAGES/BENEFITS

- The fire inspection report in line with MLAR/EN13501 guarantees indipendently tested functional safety.
- The basic channel geometry allows for the usage of the complete extensive range of accessories.
- The stamped teeth in the channel gives the sliding nuts a secure hold for high shear loads, e.g. for vertical installation.
- Different channel wall thicknesses allow for economical choices for installation.
- The scale on the mounting channels simplifies the cutting and positioning of the fixtures during installation.
- The surface coating creates a high corrosion protection against environmental influences like humidity, water, saltwater or other corrosive substances.

CERTIFICATES

PROPERTIES

- **Material:** steel S235 JR (material no.: 1.0037) acc. to DIN EN 10025
- **Zinc plating:** hot-dip galvanised, min. 45 µm, acc. to DIN EN ISO 1461

SEE ALSO

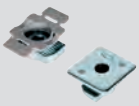

FCN Clix P/M hdg
see page 221

EMS
see page 168

FTC-ZS
see page 336

TECHNICAL DATA

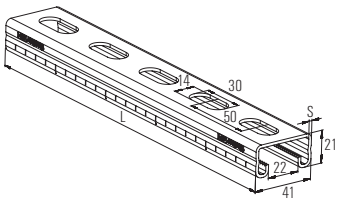

FUS 21 hdg.

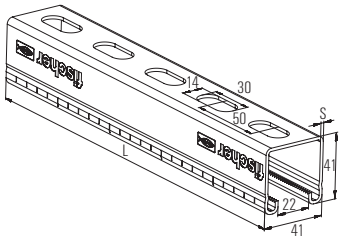

FUS 41 hdg.

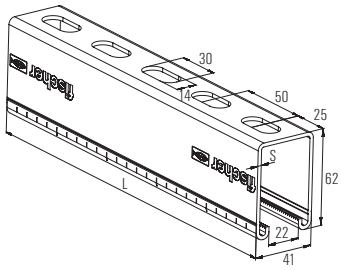

FUS 62 hdg.

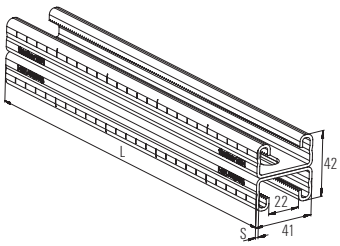

FUS 21D hdg.

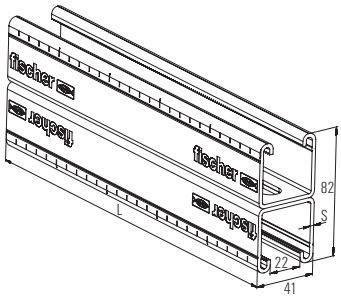

FUS 41D hdg.

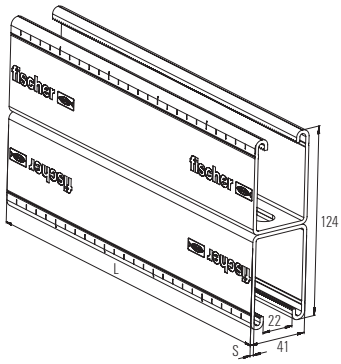

FUS D62 hdg.

Item	Art.-No.	Fire test report	Length L [mm]	Thickness S [mm]	Sales unit [pcs]
FUS 21/1,5 - 3 m hdg.	545128	–	3000	1.5	1
FUS 21/2,0 - 3 m hdg.	537653	–	3000	2.0	1
FUS 41/1,5 - 3 m hdg.	545129	–	3000	1.5	1
FUS 41/2,0 - 3 m hdg.	517426	–	3000	2.0	1
FUS 41/2,0 - 6 m hdg.	537656	–	6000	2.0	1
FUS 41/2,5 - 6 m hdg.	537658	X	6000	2.5	1
FUS 62/2,5 - 3 m hdg.	517427	X	3000	2.5	1
FUS 62/2,5 - 6 m hdg.	517428	X	6000	2.5	1
FUS 21D/2,0 - 3 m hdg.	537659	–	3000	2.0	1
FUS 21D/2,0 - 6 m hdg.	537661	–	6000	2.0	1
FUS 41D/2,5 - 6 m hdg.	537662	–	6000	2.5	1
FUS 62D/2,5 - 6 m hdg.	537663	–	6000	2.5	1

LOADS

Item	Art.-No.	Profil weight [kg/m]	Profile cross section [cm²]	Moment of inertia I_y [cm4]	Moment of inertia I_z [cm4]	Section modulus W_y [cm³]	Section modulus W_z [cm³]	Max. recommended static load for 1m length F_{rec} [kN]	Max. recommended static load for 2m length F_{rec} [kN]	Max. recommended static load for 3m length F_{rec} [kN]
FUS 21/1,5 - 3 m hdg.	545128	1.20	1.35	0.8	3.69	0.75	1.80	0.41	0.10	–
FUS 21/2,0 - 3 m hdg.	537653	1.44	1.72	0.97	4.66	0.89	2.27	0.49	0.12	0.05
FUS 41/1,5 - 3 m hdg.	545129	1.80	1.95	4.26	6.03	2.07	2.94	1.56	0.54	0.24
FUS 41/2,0 - 3 m hdg.	517426	2.06	2.52	5.33	7.69	2.58	3.75	1.94	0.67	0.30
FUS 41/2,0 - 6 m hdg.	537656	2.06	2.52	5.33	7.69	2.58	3.75	1.94	0.67	0.30
FUS 41/2,5 - 6 m hdg.	537658	2.45	3.00	6.00	8.99	2.85	4.38	2.14	0.76	0.34
FUS 62/2,5 - 3 m hdg.	517427	3.27	4.05	17.70	12.90	5.62	6.29	4.22	2.10	0.99
FUS 62/2,5 - 6 m hdg.	517428	3.27	4.05	17.70	12.90	5.62	6.29	4.22	2.10	0.99
FUS 21D/2,0 - 3 m hdg.	537659	2.87	3.44	5.49	9.31	2.61	4.54	1.96	0.69	0.31
FUS 21D/2,0 - 6 m hdg.	537661	2.87	3.44	5.49	9.31	2.61	4.54	1.96	0.69	0.31
FUS 41D/2,5 - 6 m hdg.	537662	4.89	6.00	35.01	17.90	8.76	8.78	6.58	3.28	1.96
FUS 62D/2,5 - 6 m hdg.	537663	6.55	8.09	111.00	25.80	17.90	12.58	13.45	6.72	4.47

Load case 1

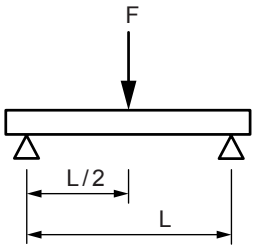

Load case 2

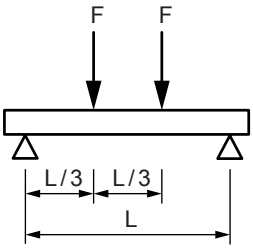

Load case 3

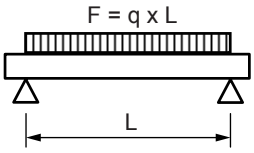

FUS 21 / 1.5

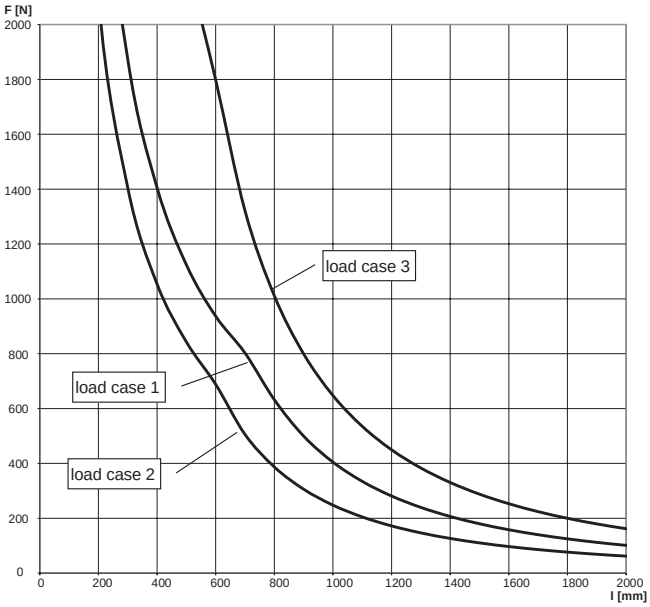

FUS 21 / 2.0

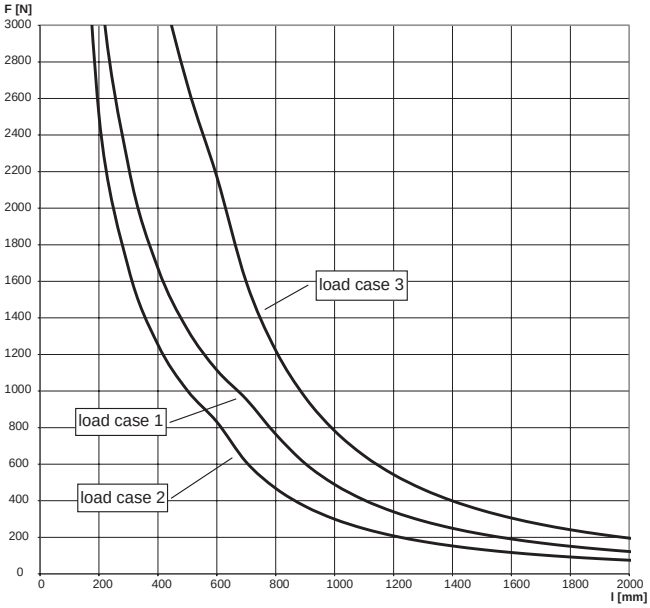

For the load curves, the permissible steel strain $\delta_{adm.}$ = 188 N/mm and the maximum deflection under load L/200 are not exceeded. Fixings and screw fastenings must be calculated accordingly. The increased yield strength is calcuated according DIN EN 1993-1-3:2010-12, sec. 3.2.2.

FUS 21 / 2.5

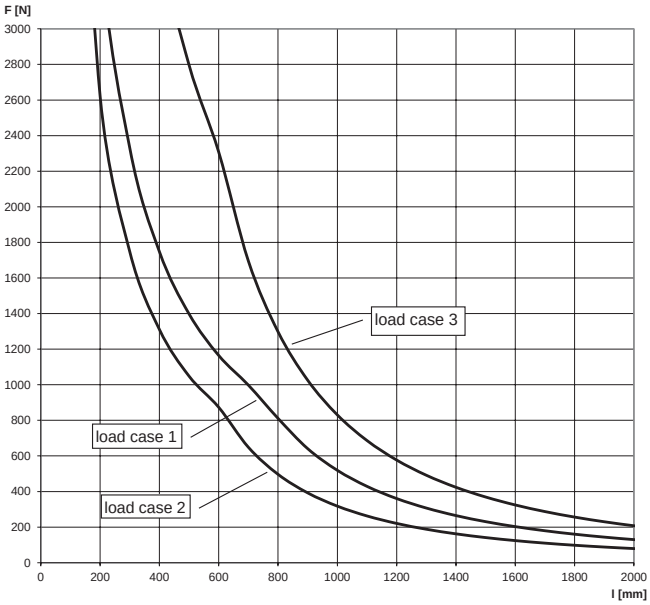

FUS 41 / 1.5

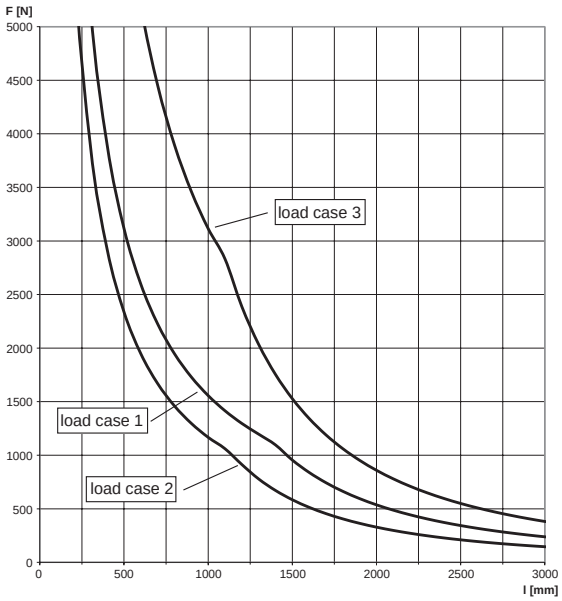

For the load curves, the permissible steel strain $\delta_{adm.}$ = 188 N/mm and the maximum deflection under load L/200 are not exceeded. Fixings and screw fastenings must be calculated accordingly. The increased yield strength is calcuated according DIN EN 1993-1-3:2010-12, sec. 3.2.2.

FUS 41 / 2.0

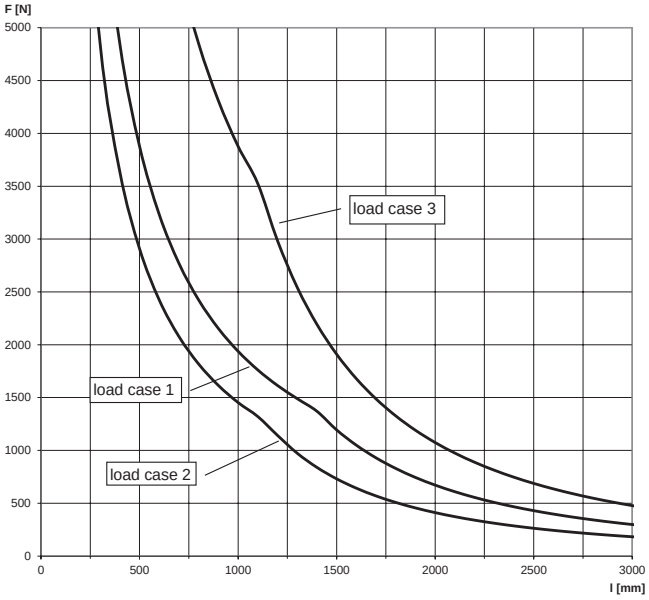

FUS 41 / 2.5

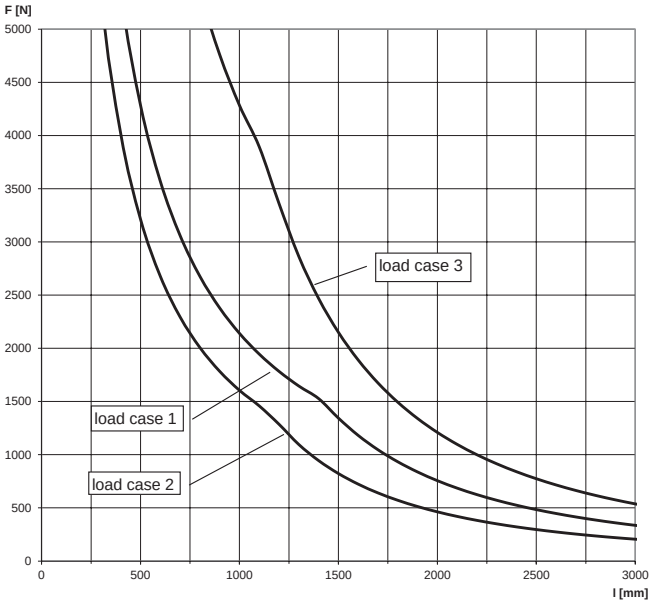

For the load curves, the permissible steel strain $\delta_{adm.}$ = 188 N/mm and the maximum deflection under load L/200 are not exceeded. Fixings and screw fastenings must be calculated accordingly. The increased yield strength is calcuated according DIN EN 1993-1-3:2010-12, sec. 3.2.2.

FUS 62 / 2.5

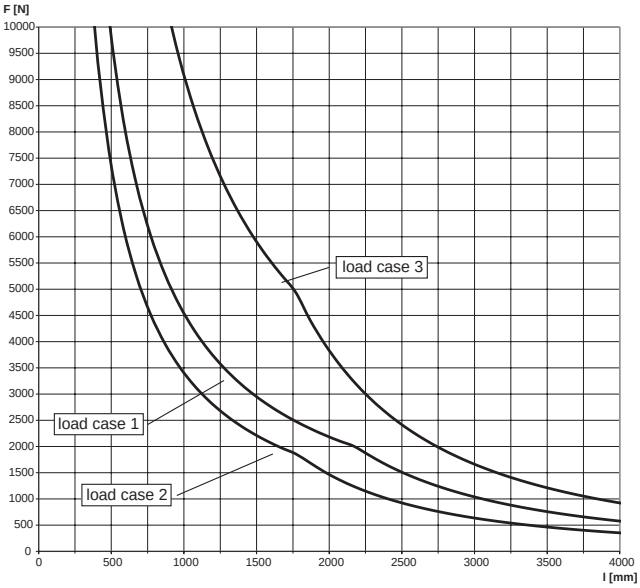

FUS 21D / 2.0

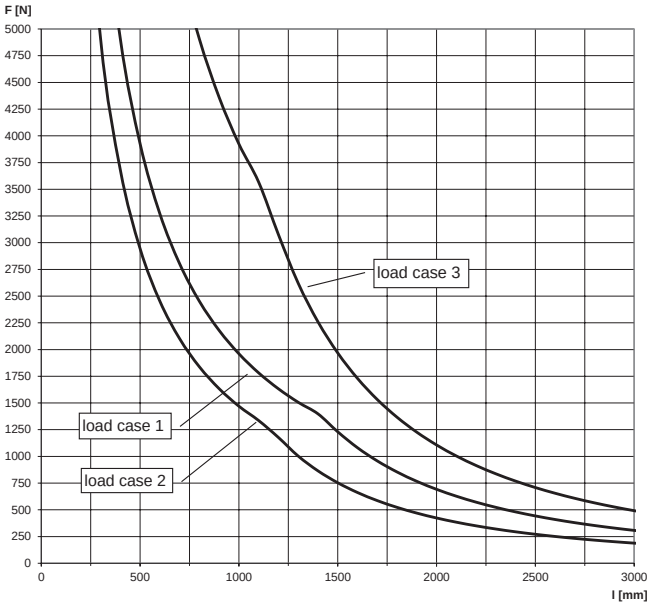

For the load curves, the permissible steel strain $\delta_{adm.}$ = 188 N/mm and the maximum deflection under load L/200 are not exceeded. Fixings and screw fastenings must be calculated accordingly. The increased yield strength is calcuated according DIN EN 1993-1-3:2010-12, sec. 3.2.2.

FUS 41D / 2.5

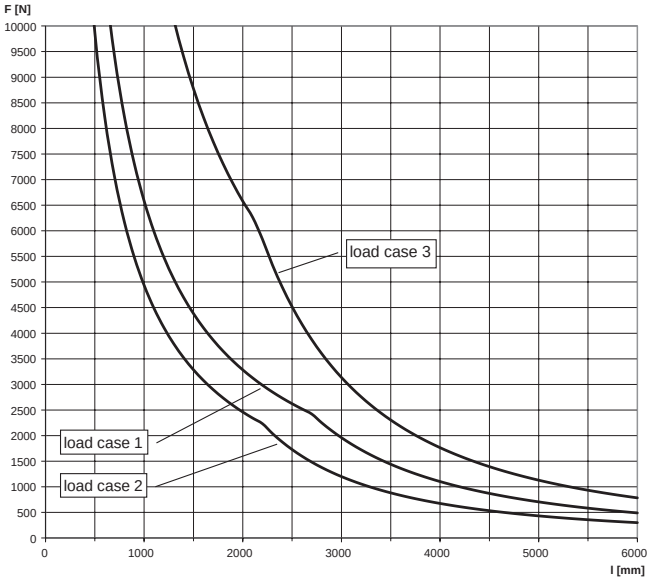

FUS 62D / 2.5

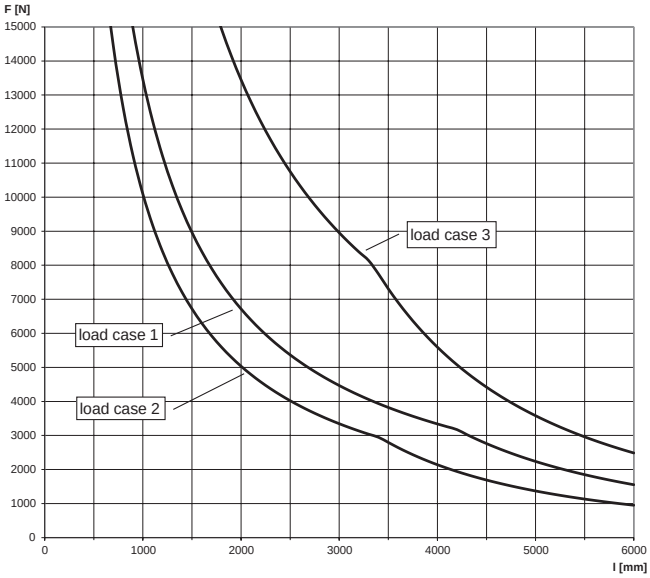

For the load curves, the permissible steel strain $\delta_{adm.}$ = 188 N/mm and the maximum deflection under load L/200 are not exceeded. Fixings and screw fastenings must be calculated accordingly. The increased yield strength is calcuated according DIN EN 1993-1-3:2010-12, sec. 3.2.2.

Construction element - Channel connector FUF OC hdg.

Connector for installation grid

Longitudal channel connection

APPLICATIONS

- Connection and alignment of the channels
- For indoor and outdoor applications and in environments with high stress to components due to corrosion

ADVANTAGES/BENEFITS

- The FUF OC connector in combination with FCN Clix P allows a simple and time-saving installation.
- The PFUF OC connector in combination with PFCN allows a simple and time-saving installation.
- The surface coating creates a high corrosion protection against environmental influences like humidity, water, saltwater or other corrosive substances.

PROPERTIES

- **Material FUF OC:** steel S235 JR (material no. 1.0037) acc. to DIN EN 10025
- **Zinc plating FUF OC:** hot-dip galvanised, min. 45 µm, acc. to DIN EN ISO 1461
- **Material PFUF OC:** steel DD11 (material no. 1.0332) acc. to DIN EN 10111
- **Zinc plating PFUF OC:** Zinclamella acc. to DIN EN ISO 12944, min. 8 µm

TECHNICAL DATA

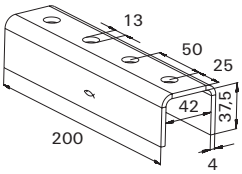

FUF OC 41 hdg.

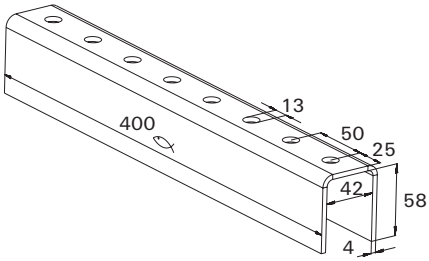

FUF OC 62 hdg.

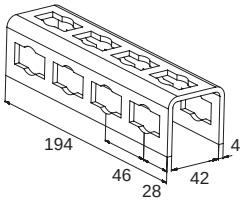

PFUF OC

Item	Art.-No.	Length l [mm]	Sales unit [pcs]		
FUF OC 41 hdg.	**517415**	200	20		
FUF OC 62 hdg.	**537591**	400	10		
PFUF OC zl	**542719**	194	6		

Hot-dip galvanised FUS profiles with welded base plate for direct mounting on the base material

Refrigerant pipe clamp on sliding element

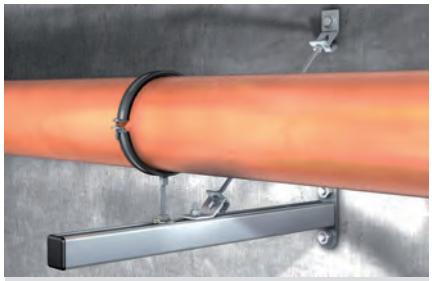

Heavy pipe on cantilever

APPLICATIONS

- Quick and easy installation of pipelines, for example, along the wall
- For indoor and outdoor applications and in environments with high stress to components due to corrosion

ADVANTAGES/BENEFITS

- The fire inspection report in line with MLAR/EN13501 guarantees indipendently tested functional safety.
- The graduated range of lengths allows for an ideal adaptation to the application.
- The arms solid base plate offers a secure hold for load-bearing construction.
- The base plate's long slots, which are at 90° to one another, allow the arm to be easily aligned.
- The stamped teeth in the channel give the sliding nuts a secure hold for high shear loads, e.g. for vertical installation.
- The surface coating creates a high corrosion protection against environmental influences like humidity, water, saltwater or other corrosive substances.

CERTIFICATES

PROPERTIES

- **Material:** steel S235 JR (material no.10037) acc. to DIN EN 10025
- **Zinc plating:** hot-dip galvanised, min. 45 µm, acc. to DIN EN ISO 1461

TECHNICAL DATA

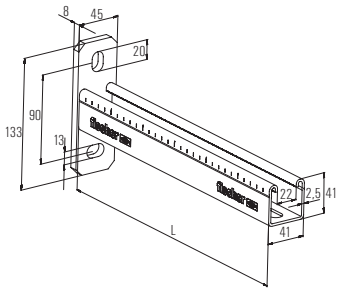

FCA 41 hdg.

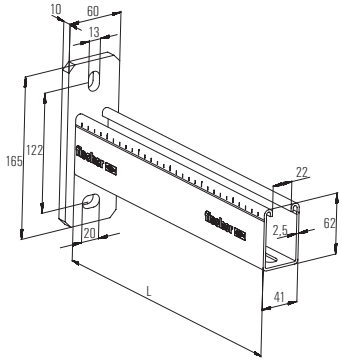

FCA 62 hdg.

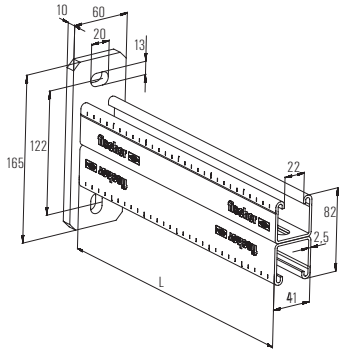

FCA 41D hdg.

Item	Art.-No.	Fire test report	Profile	Length L [mm]	Sales unit [pcs]
FCA 41 - 300 hdg.	**517411**	X	41/2,5	300	1
FCA 41 - 450 hdg.	**517412**	X	41/2,5	450	1
FCA 41 - 600 hdg.	**517413**	X	41/2,5	600	1
FCA 41 - 750 hdg.	**517414**	X	41/2,5	750	1
FCA 62 - 1000 hdg.	**538015**	X	62/2,5	1000	1
FCA 41D - 750 hdg.	**538016**	–	41D/2,5	750	1
FCA 41D - 1000 hdg.	**538017**	–	41D/2,5	1000	1

LOADS

Item	Art.-No.	Max. recommended static load load case 1 F_{rec} [kN]	Max. recommended static load load case 2 F_{rec} [kN]	Max. recommended static load load case 3 F_{rec} [kN]
FCA 41 - 300 hdg.	**517411**	1.8	0.9	1.8
FCA 41 - 450 hdg.	**517412**	1.2	0.6	1.2
FCA 41 - 600 hdg.	**517413**	0.9	0.45	0.9
FCA 41 - 750 hdg.	**517414**	0.72	0.36	0.72
FCA 62 - 1000 hdg.	**538015**	1.25	0.62	1.25
FCA 41D - 750 hdg.	**538016**	2.5	1.25	2.5
FCA 41D - 1000 hdg.	**538017**	1.9	0.93	1.9

Load case 1

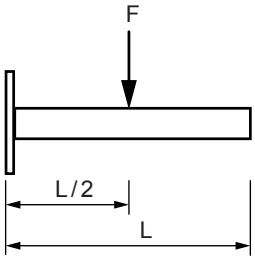

Load case 2

Load case 3

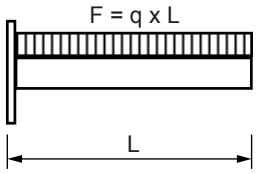

Cantilever arm FCA hdg.

FCA 41 HDG.

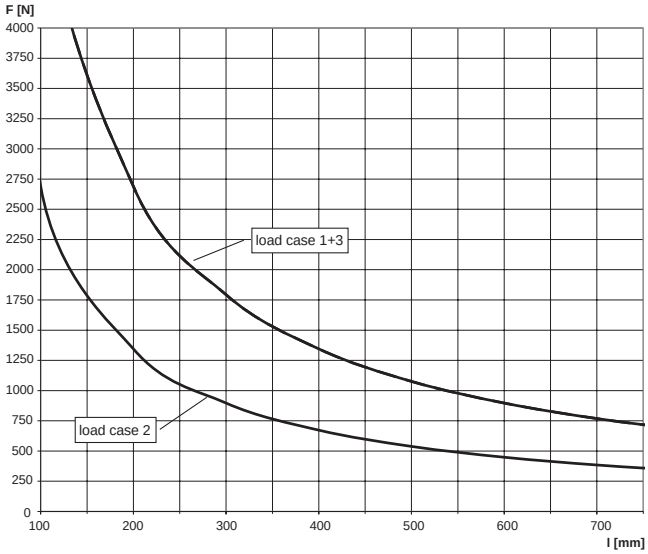

FCA 62 HDG.

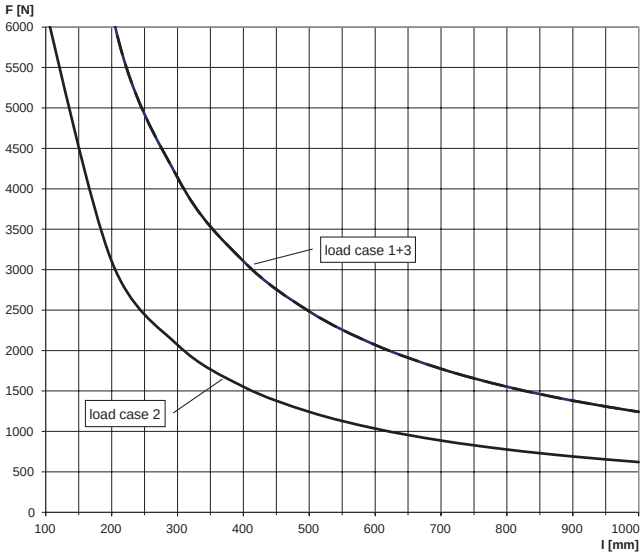

For the load curves, the permissible steel strain $\delta_{adm.}$ = 160 N/mm and the maximum deflection under load L/150 are not exceeded. Load capacity for console under consideration of the capacity of base plate. Fixings and screw fastenings must be calculated accordingly.

FCA 41 D HDG.

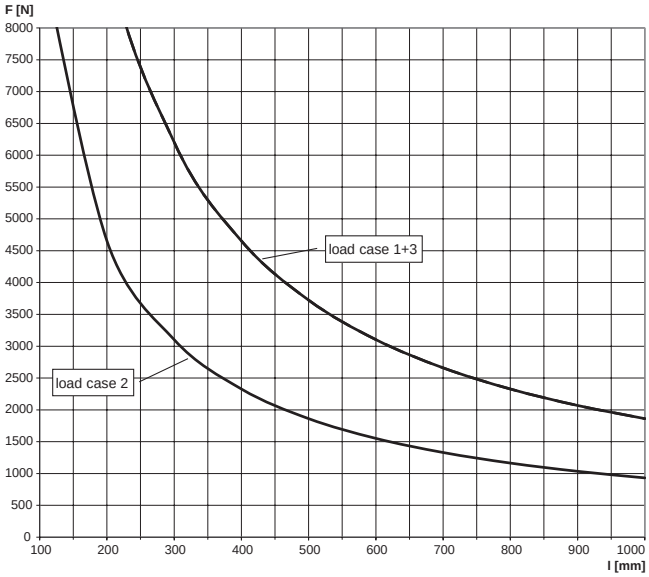

For the load curves, the permissible steel strain $\delta_{adm.}$ = 160 N/mm and the maximum deflection under load L/150 are not exceeded. Load capacity for console under consideration of the capacity of base plate. Fixings and screw fastenings must be calculated accordingly.

The large cantilever arm for heavy loads

Upright pipe on cantilever arm

Sliding element on cantilever

APPLICATIONS

- Quick and easy installation of pipelines with heavy loads
- For indoor and outdoor applications and in environments with high stress to components due to corrosion

ADVANTAGES/BENEFITS

- The robust construction, consisting of a basic and a support profile, allows the bearing of heavy loads.
- The graduated range of lengths allows an ideal adaptation to the application.
- The base plate's long slots, which are at 90° to one another, allow the arm to be easily aligned.
- The stamped teeth in the channel give the sliding nuts a secure hold for high shear loads, e.g. for vertical installation.
- The surface coating creates a high corrosion protection against environmental influences like humidity, water, saltwater or other corrosive substances.

PROPERTIES

- **Material:** steel S235 JR (material no.10037) acc. to DIN EN 10025
- **Zinc plating:** hot-dip galvanised, min. 45 µm, acc. to DIN EN ISO 1461

TECHNICAL DATA

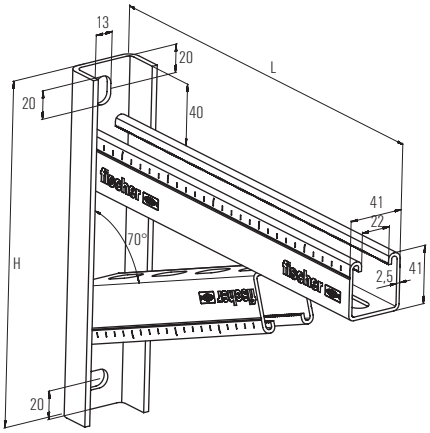

Item	Art.-No.	Length L [mm]	Height H H [mm]	Sales unit [pcs]
FCAM 300 hdg.	**538018**	300	246	1
FCAM 400 hdg.	**538019**	400	270	1
FCAM 500 hdg.	**538020**	500	284	1
FCAM 600 hdg.	**538021**	600	319	1
FCAM 700 hdg.	**538022**	700	343	1

Large cantilever arm FCAM hdg.

LOADS

Item	Art.-No.	Max. recommended static load load case 1 F_{rec} [kN]	Max. recommended static load load case 2 F_{rec} [kN]	Max. recommended static load load case 3 F_{rec} [kN]
FCAM 300 hdg.	**538018**	7.0	3.7	7.0
FCAM 400 hdg.	**538019**	7.5	2.8	7.5
FCAM 500 hdg.	**538020**	6.5	2.3	6.5
FCAM 600 hdg.	**538021**	6.0	1.9	6.0
FCAM 700 hdg.	**538022**	5.5	1.3	5.5

Load case 1

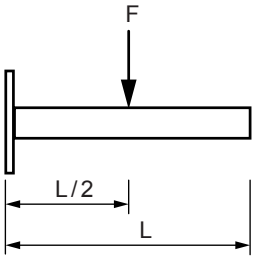

Load case 2

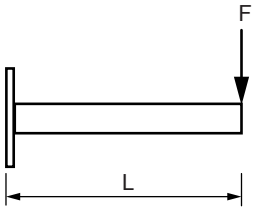

Load case 3

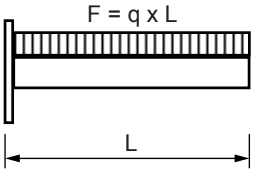

COVER CAP FEC

FEC 21 B

FEC 41 B

FEC 62 B

Item	Art.-No.	For profile	Material	Sales unit [pcs]
FEC 21 B	**077357**	41/21	polyethylene, black	100
FEC 41 B	**077355**	41/41	polyethylene, black	100
FEC 62 B	**505551**	41/62	polyethylene, black	100

Push-through connector for the quickest and easiest connection of FUS profiles

Cross connection on channel

Cantilever with saddle flange

APPLICATIONS

- Connection of FUS channels and construction elements by push-through principle
- Universal fitting for all push-through connection elements and FUS profiles
- For indoor and outdoor applications and in environments with high stress to components due to corrosion

ADVANTAGES/BENEFITS

- The correct fit of the push-through connector and connection elements allows the quickest and easiest channel connection.
- The spring effect of the PFCN in set state guarantees a simple and precise positioning in the channel.
- The teeth on the push through connector provide a secure hold in the FUS channel.
- Installation by rotating 90° enables generally the post-installation in set channels.
- The surface coating creates a high corrosion protection against environmental influences like humidity, water, saltwater or other corrosive substances.

PROPERTIES

- **Material Cap:** steel DD11 (material no. 1.0332) acc. to DIN EN 10111
- **Material Sliding nut:** steel S420MC, EN 10149-2
- **Material Hexagon screw:** 8.8 M10-28, DIN 933
- **Material Plastic parts:** polypropylene
- **Coating**: zinclamella acc. to DIN EN ISO 12944, min. 8 µm

TECHNICAL DATA

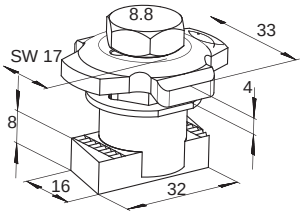

Item	Art.-No.	Thread A	Sales unit [pcs]		
PFCN 41 zl	**542733**	M 10	50		

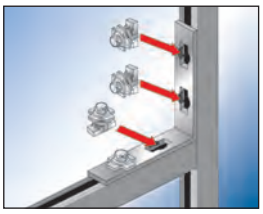

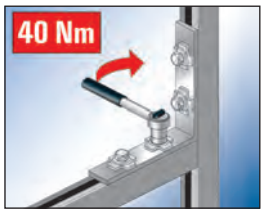

Push-through connector PFCN zl

LOADS

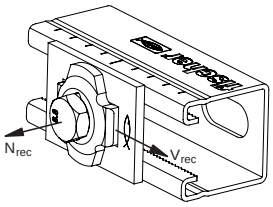

Item	Art.-No.	Max. recommended tension load for FUS 1,5 mm N_{rec} [kN]	Max. recommended tension load for FUS 2,0 mm N_{rec} [kN]	Max. recommended tension load for FUS 2,5 mm N_{rec} [kN]	Max. recommended shear load for FUS 1,5 mm V_{rec} [kN]	Max. recommended shear load for FUS 2,0 mm [kN]	Max. recommended shear load for FUS 2,5 mm [kN]	Tightening torque for screw grade ≥ 8.8 T_{inst} [Nm]
PFCN 41 zl	**542733**	4.0	5.0	7.0	3.5	4.0	4.0	40

Note: Load values are based on the PFCN 41 zl push-through connector combined with FUS channels hdg.

Construction element - Saddle flange PSF zl

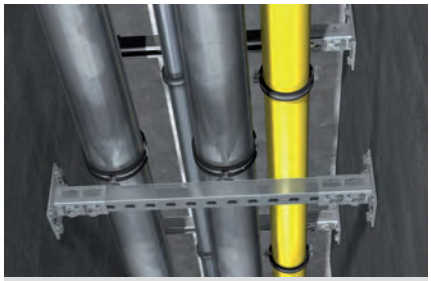

Pipe installation in escape route

Cantilever with saddle flange

APPLICATIONS

- Stable construction of connections between channels and building structures for the push-through system
- For indoor and outdoor applications and in environments with high stress to components due to corrosion

ADVANTAGES/BENEFITS

- The perfect-fit saddle allows a simple installation by inserting the mounting channels
- The saddle flange's stable design offers a secure hold for a load-bearing construction
- The surface coating creates a high corrosion protection against environmental influences like humidity, water, saltwater or other corrosive substances.

PROPERTIES

- **Material:** steel DD11 (material no. 1.0332) acc. to DIN EN 10111
- **Coating**: zinclamella acc. to DIN EN ISO 12944, min. 8 µm

TECHNICAL DATA

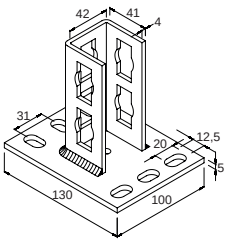

PSF 41 zl

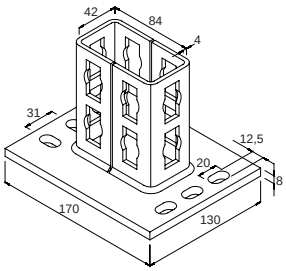

PSF 82 zl

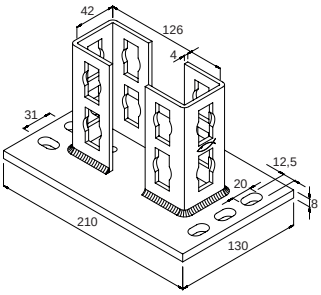

PSF 124 zl

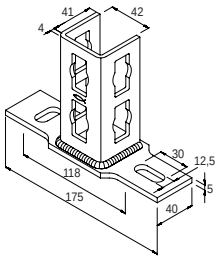

PSFQ 41 zl

Item	Art.-No.	For profile	Sales unit [pcs]		
PSF 41 zl	**542715**	21D, 41, 62	10		
PSF 82 zl	**542716**	41 D	5		
PSF 124 zl	**542718**	62 D	5		
PSFQ 41 zl	**542723**	41	10		

LOADS

see Push-through connector PFCN zl

Construction element - Universal bracket PUWS zl

3D-frame constructions

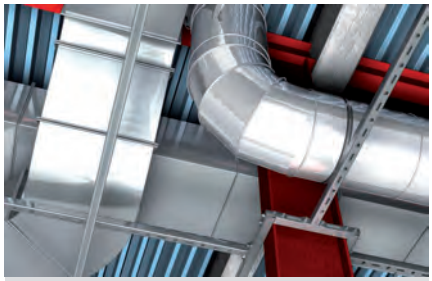

Support systems for ventilation

APPLICATIONS

- Reinforcement of supporting structures for the push-through system
- For indoor and outdoor applications and in environments with high stress to components due to corrosion

ADVANTAGES/BENEFITS

- The universal brackets for the connection of FUS channels gives a supporting structure, great stability and safety (we recommend using in pairs).
- The surface coating creates a high corrosion protection against environmental influences like humidity, water, saltwater or other corrosive substances.

PROPERTIES

- **Material:** steel DD11 (material no. 1.0332) acc. to DIN EN 10111
- **Coating**: zinclamella acc. to DIN EN ISO 12944, min. 8 µm

TECHNICAL DATA

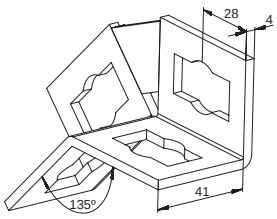

PUWS 2 x 2/135° zl

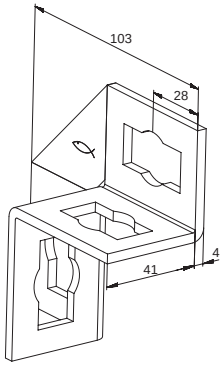

PUWS 2 x 2 zl

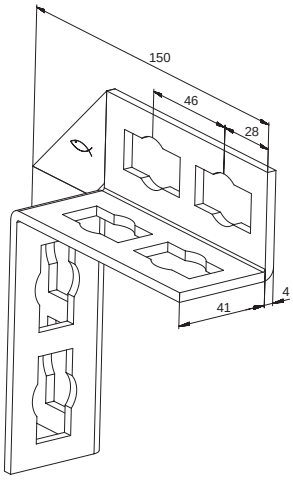

PUWS 4 x 4 zl

Item	Art.-No.	Sales unit [pcs]			
PUWS 2 x 2/135° zl	542708	10			
PUWS 2 x 2 zl	542709	10			
PUWS 4 x 4 zl	542710	8			

LOADS

see Push-through connector PFCN zl

Construction element - Angle bracket PWK zl

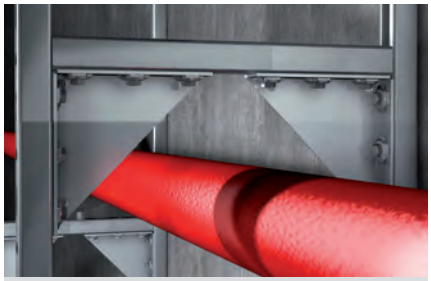

Solid frame construction

APPLICATIONS

- Reinforcement in the push-through system and for lateral fixing to the substrate
- For indoor and outdoor applications and in environments with high stress to components due to corrosion

ADVANTAGES/BENEFITS

- The stable angle bracket ensures a supporting structure with a very high level of stability and safety.
- The surface coating creates a high corrosion protection against environmental influences like humidity, water, saltwater or other corrosive substances.

PROPERTIES

- **Material:** steel DD11 (material no. 1.0332) acc. to DIN EN 10111
- **Coating**: zinclamella acc. to DIN EN ISO 12944, min. 8 µm

TECHNICAL DATA

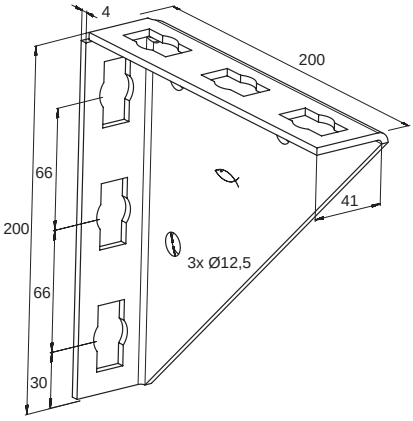

PWK 200/200 zl

Item	Art.-No.	Sales unit [pcs]			
PWK 200/200 zl	**542720**	15			

LOADS

see Push-through connector PFCN zl

Construction element – Variable bracket PVB zl

Massiv bracing of cantilever arm

APPLICATIONS

- Variable angular positioning of profile support in the push-through system
- Bracket for installation with FUS channels from 0° to 180°
- For indoor and outdoor applications and in environments with high stress to components due to corrosion

ADVANTAGES/BENEFITS

- The design of the variable bracket PVB zl enables the fixation of mounting channels at an angle of 0° to 180°.
- The holes in the connecting element make it compatible with the push-through connector PFCN zl.
- The punched holes in the base plate allow the direct fixing onto a wall, ceiling or onto a mounting channel by screw or anchor.
- The surface coating creates a high corrosion protection against environmental influences like humidity, water, saltwater or other corrosive substances.

PROPERTIES

- **Material:** steel DD11 (material no. 1.0332) acc. to DIN EN 10111
- **Coating**: zinclamella acc. to DIN EN ISO 12944, min. 8 µm

TECHNICAL DATA

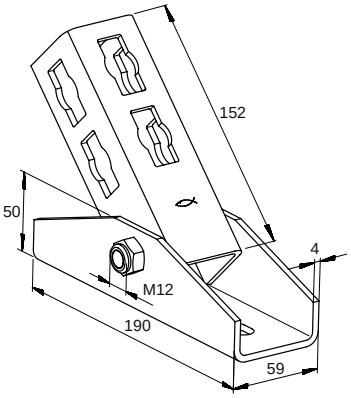

Item	Art.-No.	Sales unit [pcs]			
PVB zl	**542722**	5			

LOADS

see Push-through connector PFCN zl

Construction elements – Bracing elements PSAE zl 300 and 500

Supported channel

APPLICATIONS

- Elements for stable cantilever constructions made of FUS channels or FCA cantilever arms with push-through connector PFCN zl
- For indoor and outdoor applications and in environments with high stress to components due to corrosion

ADVANTAGES/BENEFITS

- The stable bracing element PSAE zl gives the supporting structure very high stability and safety.
- The holes in the base plate of the element make it compatible with the push-through connector PFCN zl.
- An additional PU-washer allows for fixing of elements with formholes directly onto a wall or ceiling by anchor or screw.
- The surface coating creates a high corrosion protection against environmental influences like humidity, water, saltwater or other corrosive substances.

PROPERTIES

- **Material:** steel P235TR2 (material no. 1.0255) acc. to EN 10216-1
- **Coating**: zinclamella acc. to DIN EN ISO 12944, min. 8 µm

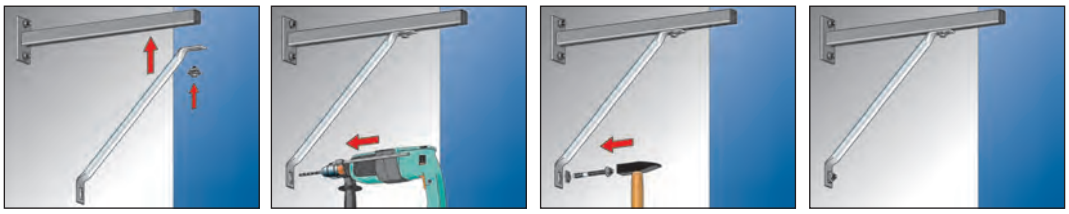

Bracing elements PSAE zl

TECHNICAL DATA

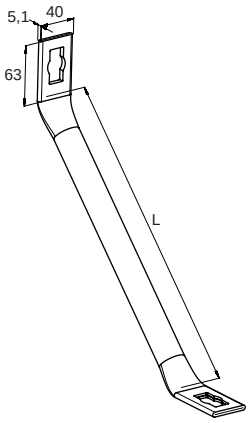

PSAE zl

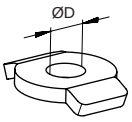

PU zl

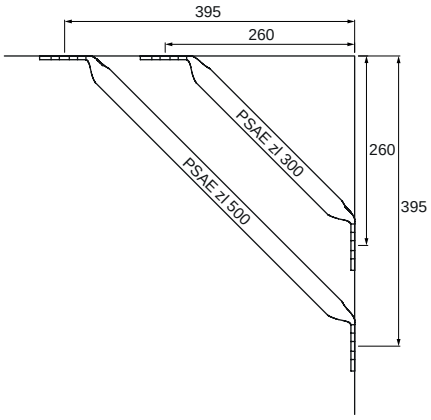

Item	Art.-No.	Length L [mm]	Sales unit [pcs]		
PSAE zl 300 Brace element	**542726**	300	10		
PSAE zl 500 Brace element	**542727**	500	10		
PU zl 10,5 Washer	**542728**	–	50		
PU zl 12,5 Washer	**542729**	–	50		

LOADS

see Push-through connector PFCN zl

Construction elements - Brackets PFFF zl

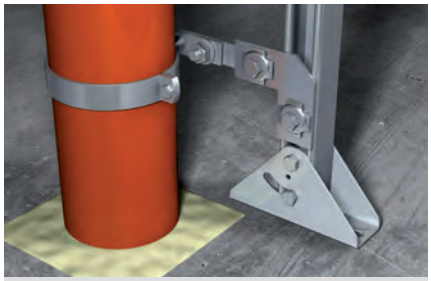

Waste water pipe

APPLICATIONS

- Arrangement of simple channel constructions in the push-through system
- For indoor and outdoor applications and in environments with high stress to components due to corrosion

ADVANTAGES/BENEFITS

- The holes in the connecting elements make them compatible with the push-through connector PFCN zl.
- The surface coating creates a high corrosion protection against environmental influences like humidity, water, saltwater or other corrosive substances.

PROPERTIES

- **Material:** steel DD11 (material no. 1.0332) acc. to DIN EN 10111
- **Coating**: zinclamella acc. to DIN EN ISO 12944, min. 8 µm

TECHNICAL DATA

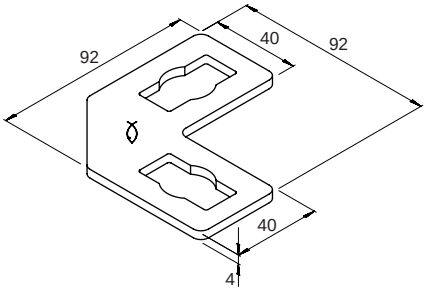

PFFF 2L zl

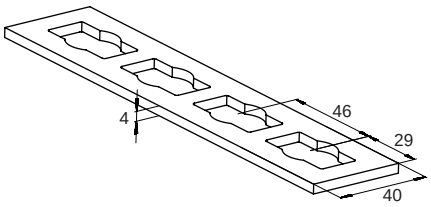

PFFF 4l zl

Item	Art.-No.	Sales unit [pcs]			
PFFF 2L zl	**542721**	20			
PFFF 4l zl	**542725**	25			

LOADS

see Push-through connector PFCN zl

Construction elements - Brackets PFAF zl

Frame constructions

Leightweight installation on cantilever

APPLICATIONS

- Arrangement of simple channel constructions in the push-through system
- For indoor and outdoor applications and in environments with high stress to components due to corrosion

ADVANTAGES/BENEFITS

- The holes in the connecting elements make them compatible with the push-through connector PFCN zl.
- The surface coating creates a high corrosion protection against environmental influences like humidity, water, saltwater or other corrosive substances.

PROPERTIES

- **Material:** steel DD11 (material no. 1.0332) acc. to DIN EN 10111
- **Coating**: zinclamella acc. to DIN EN ISO 12944, min. 8 µm

TECHNICAL DATA

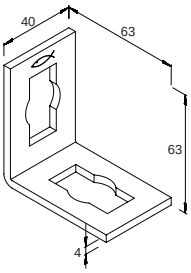

PFAF 2 zl

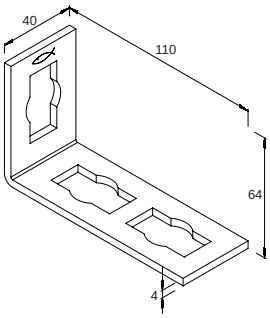

PFAF 3 zl

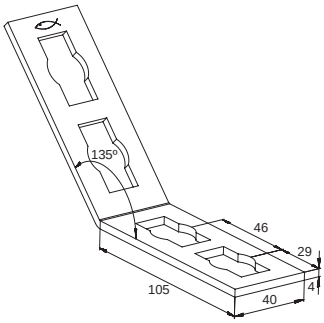

PFAF 4/135° zl

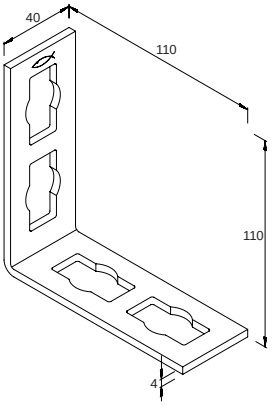

PFAF 4 zl

Item	Art.-No.	Sales unit [pcs]			
PFAF 2 zl	**542711**	25			
FPAF 3 zl	**542712**	25			
FPAF 4/135° zl	**542713**	20			
PFAF 4 zl	**542724**	25			

LOADS

see Push-through connector PFCN zl

Construction elements - Brackets PFUF zl

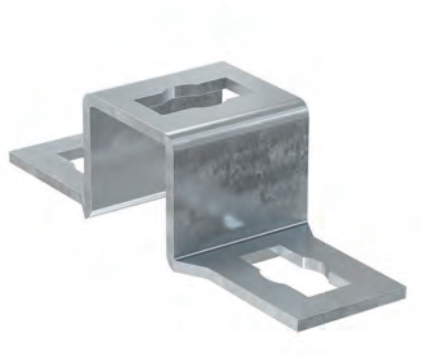

Cross connection on channel

Cross connection on channel

APPLICATIONS

- Connecting elements for multi-dimensional channel constructions
- For indoor and outdoor applications and in environments with high stress to components due to corrosion

ADVANTAGES/BENEFITS

- The various shapes of the connecting elements offer flexibility during the installation of channel constructions.
- The holes in the connecting elements make them compatible with the push-through channel nut PFCN zl.
- The surface coating creates a high corrosion protection against environmental influences like humidity, water, saltwater or other corrosive substances.

PROPERTIES

- **Material:** steel DD11 (material no. 1.0332) acc. to DIN EN 10111
- **Coating**: zinclamella acc. to DIN EN ISO 12944, min. 8 µm

TECHNICAL DATA

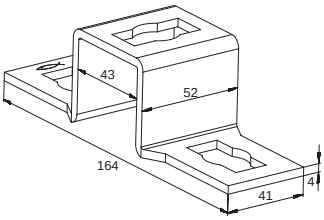

PFUF 41 zl

Item	Art.-No.	Sales unit [pcs]			
PFUF 41 zl	**542714**	25			

LOADS

see Push-through connector PFCN zl

Construction elements - Bracket PFUF 3D zl and 4D zl

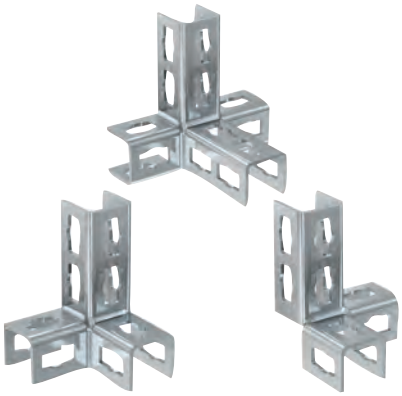

Frame constructions

APPLICATIONS

- Element for multidimensional constructions with FUS channels connected by the push-through connector PFCN
- For indoor and outdoor applications and in environments with high stress to components due to corrosion

ADVANTAGES/BENEFITS

- The 3D PFUF zl construction elements enable multidimensional constructions in a very short time.
- The holes in the construction elements make them compatible with the push-through connector PFCN zl.
- The different shapes of the construction elements generate a high flexibility for channel constructions.
- The surface coating creates a high corrosion protection against environmental influences like humidity, water, saltwater or other corrosive substances.

PROPERTIES

- **Material:** steel DD11 (material no. 1.0332) acc. to DIN EN 10111
- **Coating**: zinclamella acc. to DIN EN ISO 12944, min. 8 µm

TECHNICAL DATA

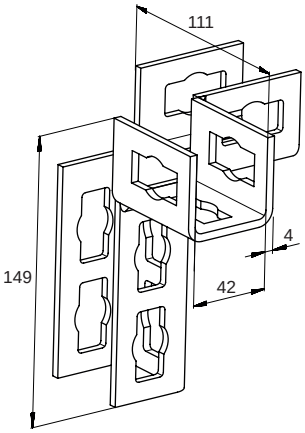

PFUF 3DL zl

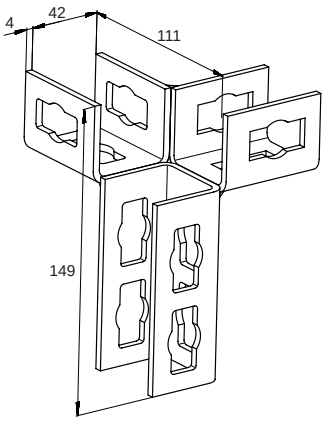

PFUF 3DR zl

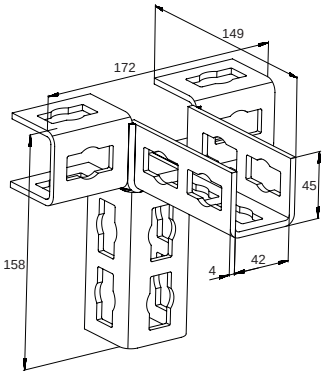

PFUF 4D zl

Item	Art.-No.	Sales unit [pcs]			
PFUF 3DL zl	**542730**	10			
PFUF 3DR zl	**542731**	10			
PFUF 4D zl	**542732**	10			

LOADS

see Push-through connector PFCN zl

Channel nut for quick and easy fixing in FUS profiles

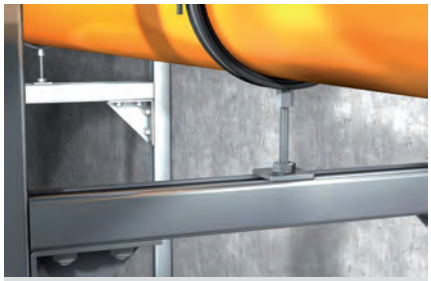

Connection on channel

Cross connection

APPLICATIONS

- Connection of FUS rails and fixtures
- Connection of pipe clamps with a threaded rod
- For indoor and outdoor applications and in environments with high stress to components due to corrosion

ADVANTAGES/BENEFITS

- The sliding nut design allows for quick and easy setting in the channel.
- The spring effect of the plastic clasp guarantees simple and precise positioning in the channel.
- The FCN Clix P's flat plastic mounting with wings offers a good hold and allows the fixtures to be conveniently mounted.
- The teeth on the sliding nut provide a secure hold in the FUS channel.
- Installation by rotating 90° enables post-installation in installed channel.
- The surface coating creates a high corrosion protection against environmental influences like humidity, water, saltwater or other corrosive substances.

CERTIFICATES

Fire resistance classification R120 according DIN EN 1363-1

MLAR R 30

PROPERTIES

- **Material**: steel S235 JR (material no. 1.0037) acc. to DIN EN 10025, plastic Nylon PA6
- **Zinc plating:** hot-dip galvanised, min. 40 µm, acc. to DIN EN ISO 1461

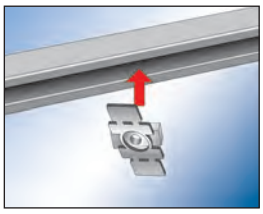
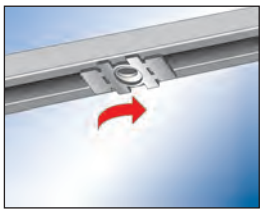
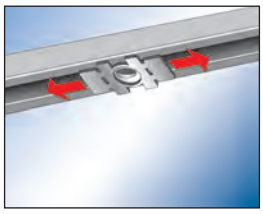
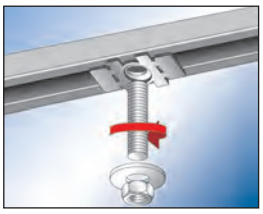

Connector FCN Clix P hdg. / FCN Clix M hdg.

TECHNICAL DATA

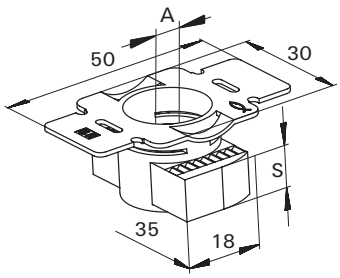

FCN Clix P hdg.

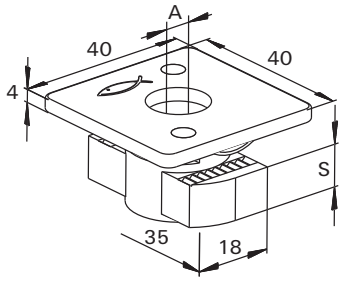

FCN Clix M hdg.

Item	Art.-No.	Fire test report	Thread A	Thickness S [mm]	Sales unit [pcs]
FCN Clix P 8 hdg.	**538106**	–	M 8	6	100
FCN Clix P 10 hdg.	**538107**	X	M 10	8	100
FCN Clix P 12 hdg.	**517420**	X	M 12	9.5	100
FCN Clix M 8 hdg.	**538108**	–	M 8	6	100
FCN Clix M 10 hdg.	**538109**	X	M 10	8	100
FCN Clix M 12 hdg.	**538110**	X	M 12	9.5	100

LOADS

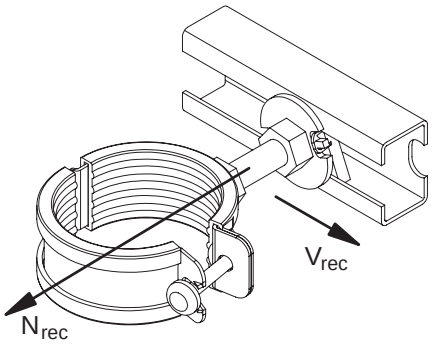

Item	Art.-No.	Max. recommended tension load for FUS 2,0 mm N_{rec} [kN]	Max. recommended tension load for FUS 2,5 mm N_{rec} [kN]	Max. recommended shear load V_{rec} [kN]	Tightening torque for screw grade ≥ 8.8 T_{inst} [Nm]	Tightening torque for screw grade ≥ 4.6 T_{inst} [Nm]
FCN Clix P 8 hdg.	**538106**	4.0	4.0	1.0	20	–
FCN Clix P 10 hdg.	**538107**	5.0	8.0	1.5	40	–
FCN Clix P 12 hdg.	**517420**	5.0	8.0	2.0	50	–
FCN Clix M 8 hdg.	**538108**	4.0	4.0	–	–	10
FCN Clix M 10 hdg.	**538109**	5.0	8.0	–	–	15
FCN Clix M 12 hdg.	**538110**	5.0	8.0	–	–	20

Connector - Channel washer HK hdg.

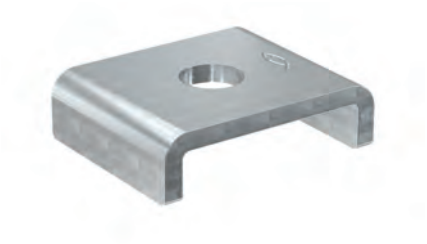

Lateral pipe mounting at channel

Channel installation at wall

APPLICATIONS

- Channel washer to strengthen the profile
- For indoor and outdoor applications and in environments with high stress to components due to corrosion

ADVANTAGES/BENEFITS

- The U-shape of the channel washer prevents the profile from bending effectively.
- The shape of the channel washer makes push-through installation of channel profiles quick and easy.
- The surface coating creates a high corrosion protection against environmental influences like humidity, water, saltwater or other corrosive substances.

CERTIFICATES

Fire resistance classification R120 according DIN EN 13501-1

MLAR R 30

PROPERTIES

- **Material:** steel S235 JR (material no.: 1.0037) acc. to DIN EN 10025
- **Zinc plating:** hot-dip galvanised, min. 45 µm, acc. to DIN EN ISO 1461

TECHNICAL DATA

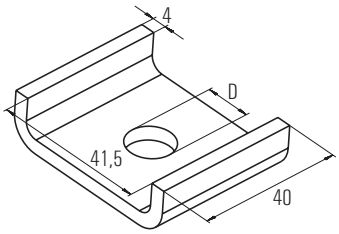

Item	Art.-No.	Fire test report	Hole-Ø A [mm]	Sales unit [pcs]
HK 41 10,5 hdg.	**547496**	**X**	10.5	50
HK 41 12,5 hdg.	**547495**	**X**	12.5	50

Construction element - Saddle flange SF hdg.

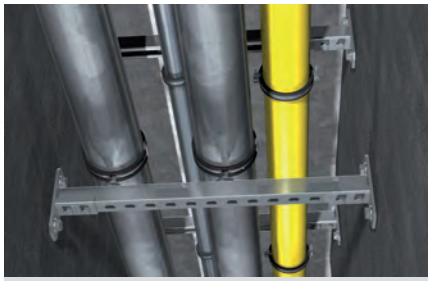

Pipe installation in escape route

Cantilever with saddle flange

CERTIFICATES

APPLICATIONS

- For solid connections between the channel and building structures
- For indoor and outdoor applications and in environments with high stress to components due to corrosion

ADVANTAGES/BENEFITS

- The perfect-fit saddle of the SF allows simple installation by inserting the mounting channel.
- The saddle flange's stable design offers a secure hold for load-bearing construction.
- The surface coating creates a high corrosion protection against environmental influences like humidity, water, saltwater or other corrosive substances.

PROPERTIES

- **Material base plate:** steel DC01 (material no.1.0330) acc. to DIN EN 10139
- **Zinc plating base plate:** hot-dip galvanised, min. 45 µm, acc. to DIN EN ISO 1461
- **Material U-Profile:** steel S235 JR (material no. 1.0037) nach DIN EN 10025
- **Zinc-plating U-Profile:** hot-dip galvanised, min. 45 µm, acc. to DIN EN ISO 1461

TECHNICAL DATA

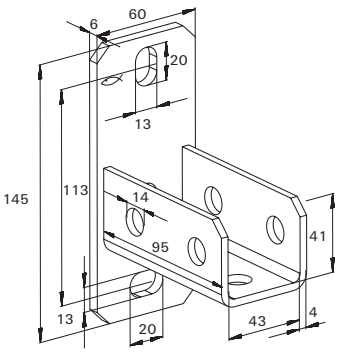

SF L 41 hdg.

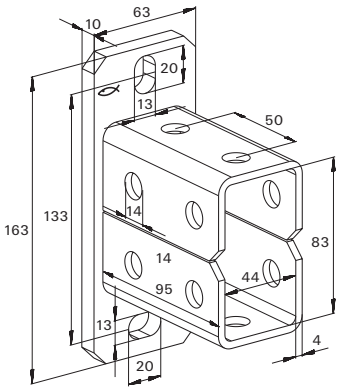

SF L 82 hdg.

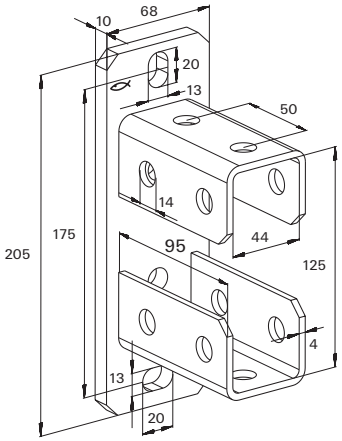

SF L 124 hdg.

Item	Art.-No.	Fire test report	For profile	Sales unit [pcs]
SF L 41 hdg.	**517421**	X	21, 41, 21D, 62	10
SF L 82 hdg.	**538125**	–	41 D	5
SF L 124 hdg.	**538126**	–	62 D	5

LOADS

see Channel nut FCN Clix P hdg.

Construction element - Universal bracket UWS hdg.

3D-frame constructions

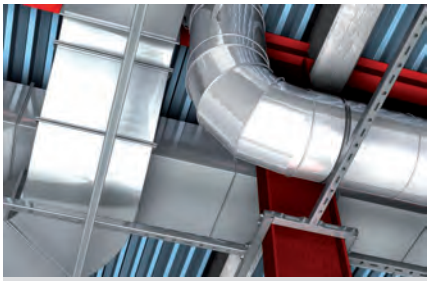

Support systems for ventilation

APPLICATIONS

- Universal angle bracket for the reinforcement of supporting structures
- For indoor and outdoor applications and in environments with high stress to components due to corrosion

ADVANTAGES/BENEFITS

- The universal bracket for connecting fischer mounting channels gives a supporting structure great stability and safety (we recommend using in pairs).
- The surface coating creates a high corrosion protection against environmental influences like humidity, water, saltwater or other corrosive substances.

CERTIFICATES

Fire resistance classification R 120 according DIN EN 1363-1

MLAR R 30

PROPERTIES

- **Material:** steel S235 JR (material no.: 1.0037) acc. to DIN EN 10025
- **Zinc plating:** hot-dip galvanised, min. 45 µm, acc. to DIN EN ISO 1461

TECHNICAL DATA

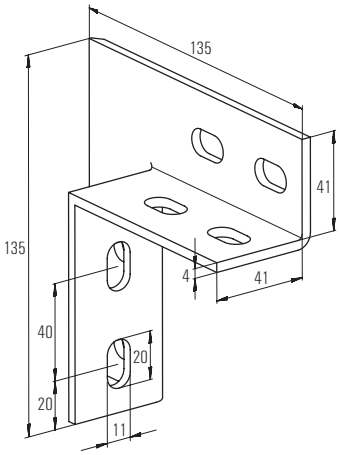

Item	Art.-No.	Fire test report		Sales unit [pcs]
UWS hdg.	**538115**	**X**		10

LOADS

see Channel nut FCN Clix P hdg.

Construction ellement - Angle bracket WK hdg.

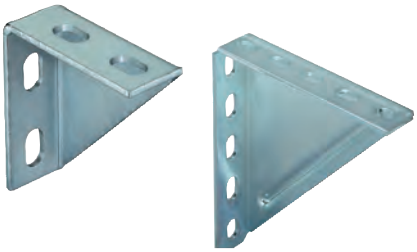

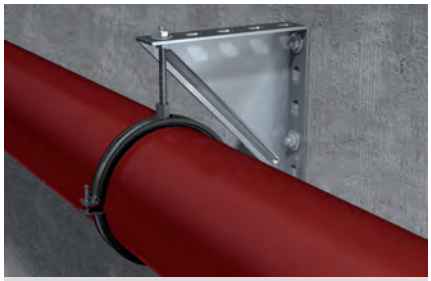

Heavy drainage pipe under angle bracket

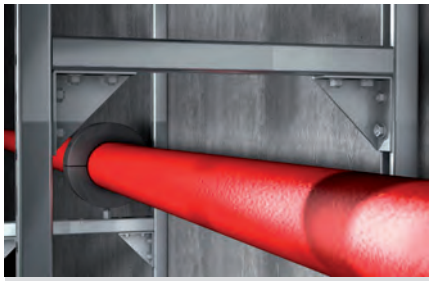

Solid frame construction

APPLICATIONS

- Reinforcement and fixing of pipelines and pipe components
- For indoor and outdoor applications and in environments with high stress to components due to corrosion

ADVANTAGES/BENEFITS

- The design of the angle bracket allows the fixing of pipe clamps or mounting channels.
- The stable angle ensures a very high level of stability and safety to the structure.
- The surface coating creates a high corrosion protection against environmental influences like humidity, water, saltwater or other corrosive substances.

PROPERTIES

- **Material:** steel S235 JR (material no. 1.0037) acc. to DIN EN 10025
- **Zinc plating:** hot-dip galvanised, min. 45 µm, acc. to DIN EN ISO 1461

TECHNICAL DATA

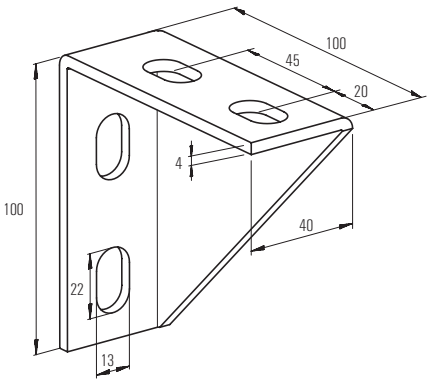

WK 100/100 hdg.

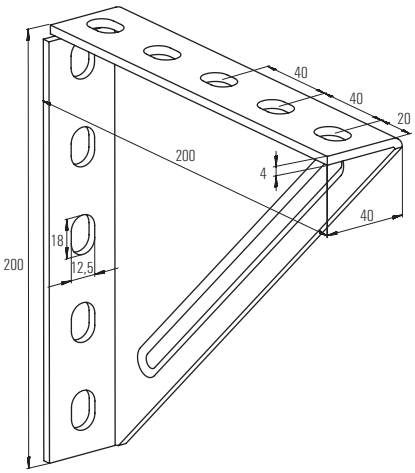

WK 200/200 hdg.

Item	Art.-No.	Sales unit [pcs]			
WK 100/100 hdg.	538117	5			
WK 200/200 hdg.	538118	5			

LOADS

Item	Art.-No.	Max. recommended static load load case 1 F_{rec} [kN]	Max. recommended static load load case 2 F_{rec} [kN]
WK 100/100 hdg.	538117	–	4.0
WK 200/200 hdg.	538118	4.0	1.8

Load case 1

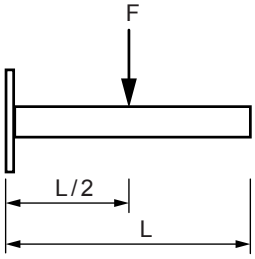

Load case 2

Construction element – Variable bracket VB hdg.

Massiv bracing of cantilever arm

APPLICATIONS

- Variable bracket for FUS channel profiles to built up supporting structures
- Bracket for installation with FUS channels from 0° to 180°
- For indoor and outdoor applications and in environments with high stress to components due to corrosion

ADVANTAGES/BENEFITS

- The design of the variable bracket PVB enables the fixation of mounting channels at an angle of 30° to 180°.
- Due to the perforations on all sides of the VB, rails can be mounted with the rail opening facing downwards or laterally.
- The punched holes in the base plate allow the direct fixing onto a wall, ceiling or onto a mounting channel.
- The stainless steel surface creates a high corrosion protection against environmental influences like humidity, water, saltwater, or other corrosive substances.

PROPERTIES

- **Material:** steel S235 JR (material no.10037) acc. to DIN EN 10025
- **Zinc plating:** hot-dip galvanised, min. 45 µm, acc. to DIN EN ISO 1461

TECHNICAL DATA

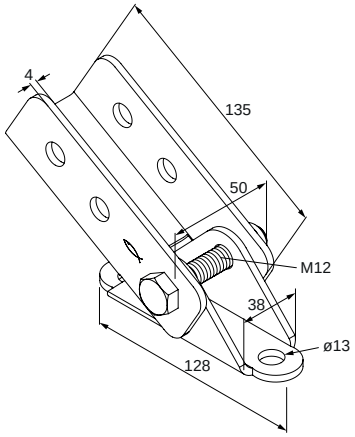

Item	Art.-No.		Sales unit [pcs]
VB hdg.	**545771**		5

LOADS

see Channel nut FCN Clix P hdg.

Construction element - Threaded rod bracket FSB 45° hdg.

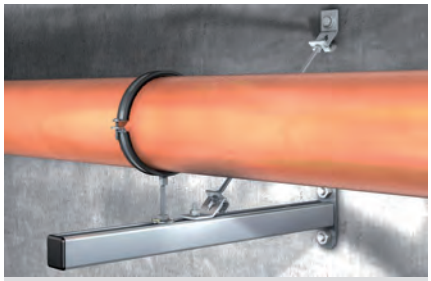

Heavy pipe on cantilever

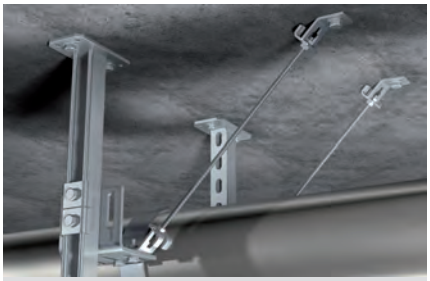

Bracing for fixpoint

APPLICATIONS

- 45°-element for anchoring with M10 threaded rods
- For indoor and outdoor applications and in environments with high stress to components due to corrosion

ADVANTAGES/BENEFITS

- The anchoring element's socket allows the fast insertion of a pre-mounted M10 threaded rod with nut.
- The hole in the base plate allows the direct fixing onto a wall or ceiling, or onto a mounting channel.
- The surface coating creates a high corrosion protection against environmental influences like humidity, water, saltwater or other corrosive substances.

PROPERTIES

- **Material:** steel S235 JR (material no.: 1.0037) acc. to DIN EN 10025
- **Zinc plating:** hot-dip galvanised, min. 45 µm, acc. to DIN EN ISO 1461

TECHNICAL DATA

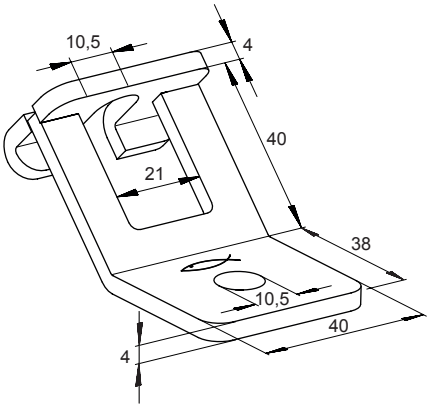

Item	Art.-No.	Sales unit [pcs]			
FSB 45° hdg.	**538120**	20			

LOADS

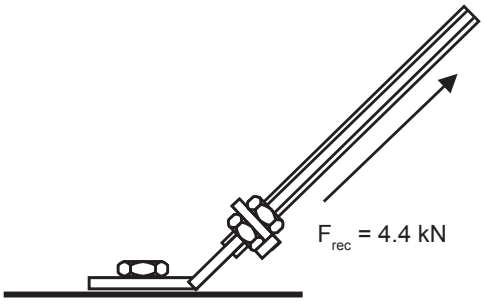

Clamp for fixing of profiles to steel girders

Channel to steelbeam

APPLICATIONS

- Fixing to steel girders
- For indoor and outdoor applications and in environments with high stress to components due to corrosion

ADVANTAGES/BENEFITS

- The design of the beam clamp allows fixing without drilling or welding.
- The various lengths of the beam clamp allow the fixing on most standard beams.
- The shape of the beam clamp allows a simple adjustment of the channel connection.
- The surface coating creates a high corrosion protection against environmental influences like humidity, water, saltwater or other corrosive substances.

PROPERTIES

- **Material plate/U-bolt pipe hanger:** steel S235 JR (material no.10037) acc. to DIN EN 10025
- **Material hexagon nut:** steel resistance class 8
- **Zinc plating:** hot-dip galvanised, min. 40 - 45 µm, acc. to DIN EN ISO 1461

TECHNICAL DATA

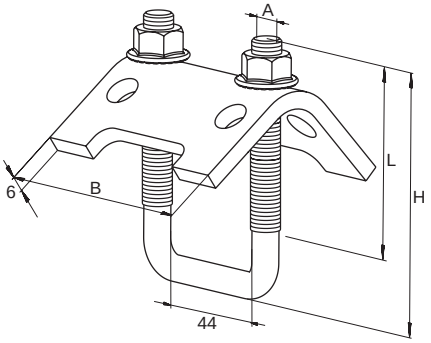

Item	Art.-No.	For profile	Thread A	Width B B [mm]	Height H H [mm]	Sales unit [pcs]
TKR 21- 42 hdg.	**538122**	21, 41	M 10	79	97	20
TKR 82 hdg.	**538123**	62, 41D	M 10	79	137	20
TKR 124 hdg.	**538124**	62 D	M 10	79	179	10

LOADS

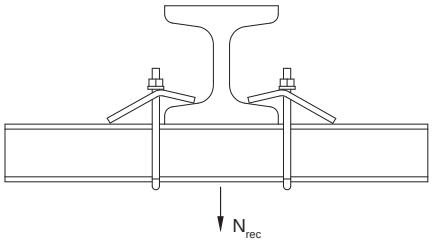

Item	Art.-No.	Max. recom. static load (centr. tension) $N_{recom.}$ [kN]	Tightening torque T_{inst} [Nm]
TKR 21- 42 hdg.	**538122**	10.00	20
TKR 82 hdg.	**538123**	10.00	20
TKR 124 hdg.	**538124**	10.00	20

Construction elements - Brackets FFF hdg.

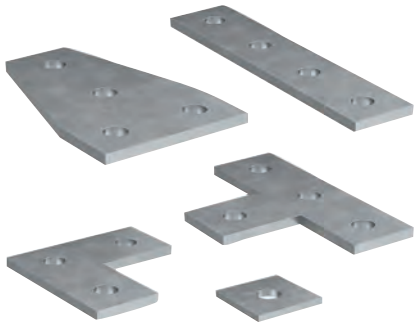

Frame constructions

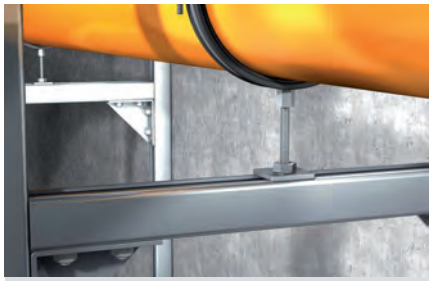

Connection on channel

APPLICATIONS

- Connecting elements for the joining or strengthening of simple channel constructions
- For indoor and outdoor applications and in environments with high stress to components due to corrosion

PROPERTIES

- **Material:** steel S235 JR (material no.10037) acc. to DIN EN 10025
- **Zinc plating:** hot-dip galvanised, min. 45 µm, acc. to DIN EN ISO 1461

TECHNICAL DATA

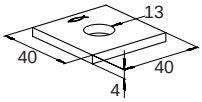

FFF 1 hdg.

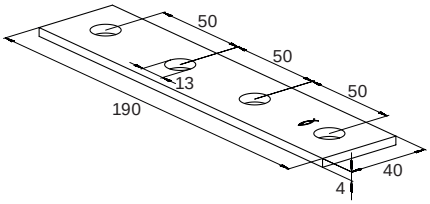

FFF 4 hdg.

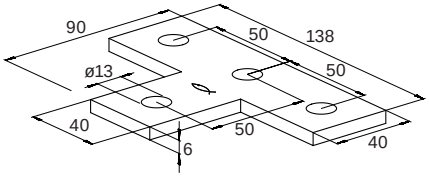

FFF 4T hdg.

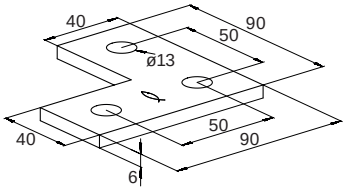

FFF 3L hdg.

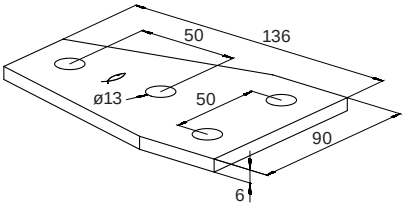

FFF 4D hdg.

Item	Art.-No.		Sales unit [pcs]
FFF 1 hdg.	**547506**		25
FFF 3L hdg.	**537581**		25
FFF 4 hdg.	**547507**		25
FFF 4T hdg.	**537583**		25
FFF 4D hdg.	**537584**		25

LOADS

see Channel nut FCN Clix P hdg.

Construction elements - Mounting bracket FAF hdg.

Frame constructions

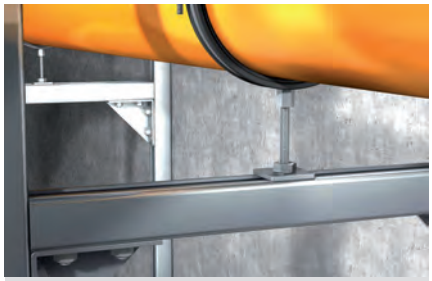

Connection on channel

APPLICATIONS

- Connecting elements for the joining or strengthening of simple channel constructions
- For indoor and outdoor applications and in environments with high stress to components due to corrosion

PROPERTIES

- **Material:** steel S235 JR (material no.: 1.0037) acc. to DIN EN 10025
- **Zinc plating:** hot-dip galvanised, min. 45 µm, acc. to DIN EN ISO 1461

TECHNICAL DATA

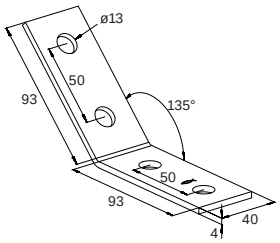

FAF 2/135° hdg.

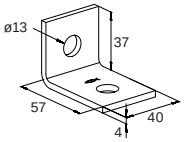

FAF 2 hdg.

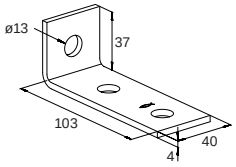

FAF 3 hdg.

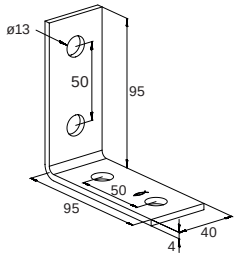

FAF 4 hdg.

Item	Art.-No.	Sales unit [pcs]			
FAF 4/135° hdg.	**547511**	25			
FAF 2 hdg.	**547508**	25			
FAF 3 hdg.	**547509**	25			
FAF 4 hdg.	**547510**	25			

LOADS

see Channel nut FCN Clix P hdg.

Construction elements - Mounting brackets FUF hdg.

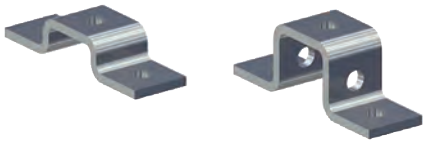

Cross connection on channel

APPLICATIONS

- Connecting elements for multi-dimensional channel constructions
- For indoor and outdoor applications and in environments with high stress to components due to corrosion

ADVANTAGES/BENETITS

- The various shapes of the connecting elements offer flexibility when it comes to the installation of rail constructions.
- The holes in the connecting elements make them compatible with the FCN Clix P.
- The surface coating creates a high corrosion protection against environmental influences like humidity, water, saltwater or other corrosive substances.

PROPERTIES

- **Material:** steel S235 JR (material no.10037) acc. to DIN EN 10025
- **Zinc plating:** hot-dip galvanised, min. 45 µm, acc. to DIN EN ISO 1461

TECHNICAL DATA

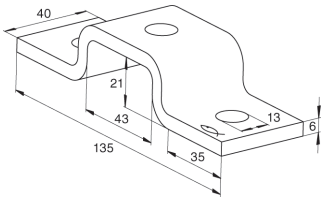

FUF 21 hdg.

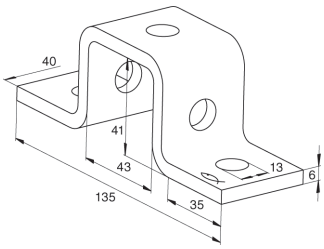

FUF 41 hdg.

Item	Art.-No.	Sales unit [pcs]			
FUF 21 hdg.	**537588**	25			
FUF 41 hdg.	**537589**	25			

LOADS

see Channel nut FCN Clix P hdg.

Construction elements - Mounting brackets FUF hdg.

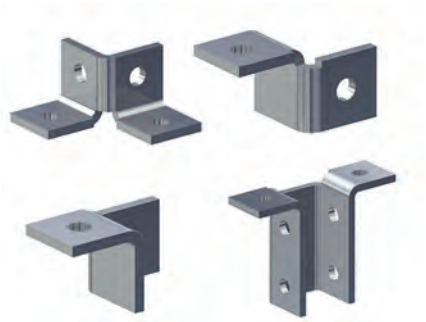

3D-frame constructions

APPLICATIONS

- Connecting elements for multi-dimensional channel constructions
- For indoor and outdoor applications and in environments with high stress to components due to corrosion

ADVANTAGES/BENETITS

- The various shapes of the connecting elements offer flexibility when it comes to the installation of rail constructions.
- The holes in the connecting elements make them compatible with the FCN Clix P.
- The surface coating creates a high corrosion protection against environmental influences like humidity, water, saltwater or other corrosive substances.

PROPERTIES

- **Material:** steel S235 JR (material no.10037) acc. to DIN EN 10025
- **Zinc plating:** hot-dip galvanised, min. 45 µm, acc. to DIN EN ISO 1461

TECHNICAL DATA

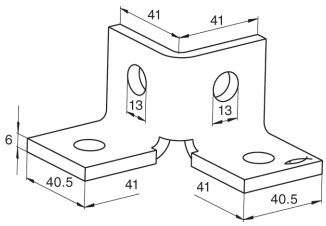

FUF 4Y hdg.

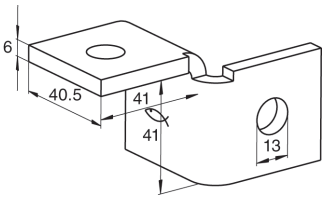

FUF 180°L hdg.

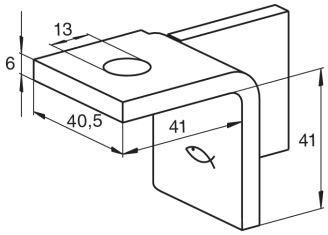

FUF 180°R hdg.

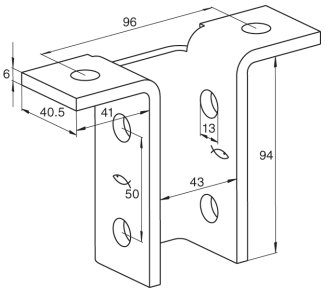

FUF 8T hdg.

Item	Art.-No.	Sales unit [pcs]			
FUF 4Y hdg.	**537585**	20			
FUF 180°L hdg.	**537586**	20			
FUF 180°R hdg.	**537587**	20			
FUF 8T hdg.	**537590**	10			

LOADS

see Channel nut FCN Clix P hdg.

Threaded rod G hdg.

TECHNICAL DATA

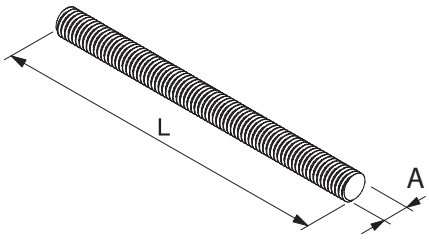

- **Material:** DIN 976 steel 4.8 acc. to DIN EN ISO 898-1
- **Coating**: G8 Zinclamella acc. to DIN EN ISO 10683 or 13858, min. 15 µm G10-G16 hot-dip galvanised, min. 40 µm acc. to 10684

Threaded rod **G**

Item	Art.-No.	Thread A	Length l [mm]	Sales unit [pcs]
G 8 zl	**537691**	M 8	1000	25
G 10 hdg.	**537694**	M 10	1000	25
G 12 hdg.	**537695**	M 12	1000	20
G 16 hdg.	**537696**	M 16	1000	10

Washer U hdg.

TECHNICAL DATA

PROPERTIES

- **Material:** steel acc. to DIN 10139
- **Zinc plating:** min. 50 µm acc. to DIN EN ISO 12683

Item	Art.-No.	Thickness S [mm]	External-Ø d [mm]	Hole-Ø D [mm]	Sales unit [pcs]
U 8 x 28 hdg	**537682**	2	28	8.4	100
U 10 x 21 hdg	**537683**	2	21	10.5	100
U 10 x 40 hdg	**537684**	3	40	10.5	100
U 12 x 24 hdg	**537685**	2.5	24	13	100
U 12 x 40 hdg	**537686**	3	40	13	100

Hexagonal nut MU hdg.

TECHNICAL DATA

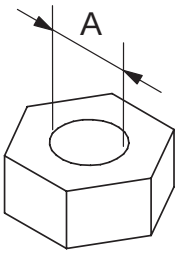

PROPERTIES

- **Material:** steel acc. to DIN 267-4, strength category 8
- **Zinc plating:** hot-dip galvanised, approx. 40 µm, acc. to DIN EN ISO 10684

Item	Art.-No.	Thread A	Width across nut ⬡ SW [mm]	Sales unit [pcs]
MU M8 hdg.	**537687**	M 8	13	100
MU M10 hdg.	**537688**	M 10	17	100
MU M12 hdg.	**537689**	M 12	19	100
MU M16 hdg.	**537690**	M 16	24	100

Hexagonal screw SKS hdg.

TECHNICAL DATA

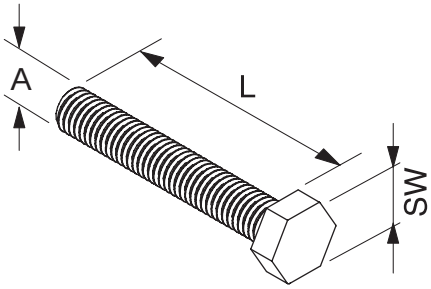

PROPERTIES

- **Material:** steel acc. to DIN-EN-ISO 898-1, steel 8.8
- **Zinc plating:** hot-dip galvanised, min. 40 µm, acc. to DIN EN ISO 10684

Hexagonal bolt **SKS**

Item	Art.-No.	Thread A	Width across nut ⬡ SW [mm]	Sales unit [pcs]
SKS 10 x 25 hdg.	**537681**	M 10	17	100
SKS 12 x 25 hdg.	**537680**	M 12	19	100

fischer
innovative solutions

4 Installation system stainless steel

	Page
PIPE CLAMPS A2/A4	
Pipe clamp FRS A2/A4	242
MS-L A2	
Channel MS-L A2	243
Cantilever arm ALK A2	243
T-head bolt FHS Clix A2	243
Installation angle bracket MW A2	244
Saddle flange SF A2	244
Channel nut HG A2	244

	Page
FUS A2/A4	
FUS Channel A2/A4	245
Cantilever arm FCA A4	245
Saddle flange SF L A4	246
Mounting bracket FAF A4	246
Beam clamp TKR A4	248
Channel washer HK 41 A4	248
Clix channel nut FCN Clix A4	249
Stud screw STS A2/A4	249
ACCESSORIES A2/A4	
Threaded rod G A2/A4	250
Threaded stud GS A4	250
Hexagonal connector VM A4	250
Washer U A4	251
Hexagonal nut MU A4	251
Hexagonal screw SKS A4	251

Pipe clamp FRS A2/A4

TECHNICAL DATA

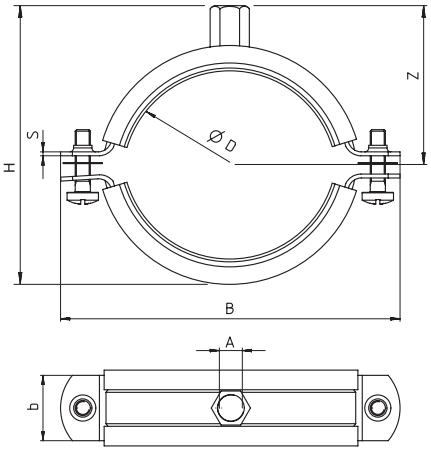

PROPERTIES

- **Material:** stainless steel A2: material-no 1.4301, acc. DIN EN 10088-1
- **Material:** stainless steel A4: material-no 1.4401, acc. DIN EN 10088-1
- **Material sound insulation insert:** EPDM; chlorine-free; silicone-free
- **Temperature range:** -40 °C to +100 °C
- **Hardness:** 55 ± 5° Shore A
- **Fire behaviour:** DIN 4102: Class B2

Item	Art.-No.	Thread A	Size [inch]	Clamping range D [mm]	Width B [mm]	Height H [mm]	Width x thickness clamp band b x s [mm]	Height Z [mm]	Locking screw	Max. recom. static load (centr. tension) $N_{recom.}$ [kN]	Sales unit [pcs]
FRS 3/8" A2	**064290**	M 8	3/8"	15 - 19	62	40	20 x 1,2	23	M 6	1.00	100
FRS 1/2" A2	**064536**	M 8	1/2"	20 - 24	68	45	20 x 1,2	26	M 6	1.00	100
FRS 3/4" A2	**064639**	M 8	3/4"	25 - 30	75	52	20 x 1,2	29	M 6	1.00	100
FRS 1" A2	**064646**	M 8	1"	31 - 38	80	60	20 x 1,2	32	M 6	1.00	100
FRS 1 1/4" A2	**064669**	M 8	1 1/4"	40 - 46	90	67	20 x 1,2	37	M 6	1.00	50
FRS 1 1/2" A2	**064673**	M 8	1 1/2"	48 - 54	97	75	20 x 1,2	41	M 6	1.00	50
FRS 54 - 58 A2	**064674**	M 8	–	54 - 59	104	80	20 x 1,2	44	M 6	1.00	50
FRS 2" A2	**064675**	M 8	2"	60 - 64	110	85	20 x 1,2	46	M 6	1.00	50
FRS 67 - 71 A2	**064688**	M 8	–	67 - 71	119	92	20 x 1,2	49	M 6	1.00	25
FRS 2 1/2" A2	**064689**	M 10	2 1/2"	72 - 78	130	99	25 x 1,5	53	M 6	1.30	25
FRS 81 - 86 A2	**064693**	M 10	–	81 - 86	132	107	25 x 1,5	58	M 6	1.30	25
FRS 3" A2	**064694**	M 10	3"	87 - 92	144	113	25 x 1,5	60	M 6	1.30	25
FRS 95 - 103 A2	**064695**	M 10	–	95 - 103	156	124	25 x 1,5	66	M 6	1.30	25
FRS 4" A2	**064697**	M 10	4"	102 - 116	172	138	25 x 2,0	73	M 6	2.0	20
FRS 121 - 127 A2	**064709**	M 10	–	121 - 127	192	149	25 x 2,0	79	M 8	2.0	10
FRS 133 - 141 A2	**064713**	M 10	5"	133 - 141	198	163	25 x 2,0	86	M 8	2.0	10
FRS 159 - 168 A2	**064714**	M 10	6"	159 - 169	218	191	25 x 2,0	100	M 8	2.0	8
FRS 3/8" A4	**064864**	M 8	3/8"	15 - 19	62	40	20 x 1,2	23	M 6	1.00	100
FRS 1/2" A4	**064865**	M 8	1/2"	20 - 24	68	45	20 x 1,2	26	M 6	1.00	100
FRS 3/4" A4	**064866**	M 8	3/4"	25 - 30	75	52	20 x 1,2	29	M 6	1.00	100
FRS 1" A4	**064868**	M 8	1"	31 - 38	80	60	20 x 1,2	32	M 6	1.00	100
FRS 1 1/4" A4	**064869**	M 8	1 1/4"	40 - 46	90	67	20 x 1,2	37	M 6	1.00	50
FRS 1 1/2" A4	**064870**	M 8	1 1/2"	48 - 54	97	75	20 x 1,2	41	M 6	1.00	50
FRS 54 - 58 A4	**064873** 1)	M 8	–	54 - 59	104	80	20 x 1,2	44	M 6	1.00	50
FRS 2" A4	**064874**	M 8	2"	60 - 64	110	85	20 x 1,2	46	M 6	1.00	50
FRS 67 - 71 A4	**064875** 1)	M 8	–	67 - 71	119	92	25 x 1,2	49	M 6	1.00	25
FRS 2 1/2" A4	**064879**	M 10	2 1/2"	72 - 78	130	99	25 x 1,5	53	M 6	1.30	25
FRS 81 - 86 A4	**064892** 1)	M 10	–	81 - 86	132	107	25 x 1,5	58	M 6	1.30	25
FRS 3" A4	**064893** 1)	M 10	3"	87 - 92	144	113	25 x 1,5	60	M 6	1.30	25
FRS 95 - 103 A4	**064894** 1)	M 10	–	95 - 103	156	124	25 x 1,5	66	M 6	1.30	25
FRS 4" A4	**064898**	M 10	4"	102 - 116	172	138	25 x 2,0	73	M 6	2.0	20
FRS 121 - 127 A4	**064899** 1)	M 10	–	121 - 127	192	149	25 x 2,0	79	M 8	2.0	10
FRS 133 - 141 A4	**064901** 1)	M 10	5"	133 - 141	198	163	25 x 2,0	86	M 8	2.0	10
FRS 159 - 168 A4	**064903**	M 10	6"	159 - 168	218	191	25 x 2,0	100	M 8	2.0	8

1) Delivery time on request.

Channel MS-L

TECHNICAL DATA

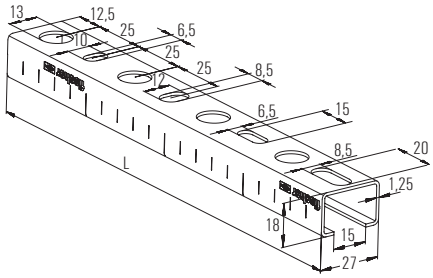

PROPERTIES

- **Material:** stainless steel A2: material-no 1.4301, acc. DIN EN 10088-1

Item	Art.-No.	Length L [mm]	Sales unit [pcs]
MS 27/18 A2 - 2 m	**064905**	2000	1

Weights and loads see chapter MS-L and MS

Cantilever arm ALK A2

TECHNICAL DATA

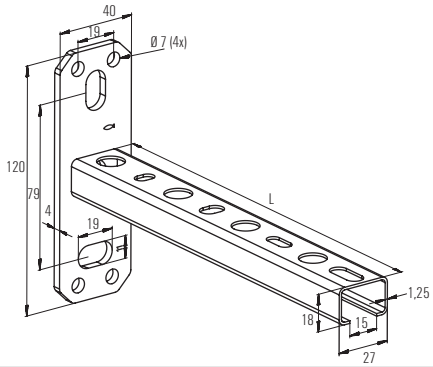

PROPERTIES

- **Material:** stainless steel A2: material-no 1.4301, acc. DIN EN 10088-1

Item	Art.-No.	Length L [mm]	Height H H [mm]	Sales unit [pcs]
ALK 27/18 - 200 A2	**065101**	200	18	20

T-head bolt FHS Clix

TECHNICAL DATA

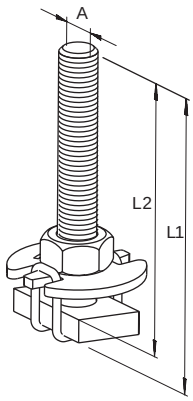

PROPERTIES

- **Material:** stainless steel A2: material-no 1.4301, acc. DIN EN 10088-1

Item	Art.-No.	Thread A	Length L_1 [mm]	Length L_2 [mm]	Max. recommended tension load for MS-L 27/18 N_{rec} [kN]	Max. recommended shear load V_{rec} [kN]	Tightening torque T_{inst} [Nm]	Sales unit [pcs]
FHS CLIX 8 x 30 A2	**077634**	M 8	30	25	1.7	0.2	5	100
FHS CLIX 10 x 30 A2	**064975**	M 10	30	25	2.0	0.3	8	100

Channel nut HG A2

TECHNICAL DATA

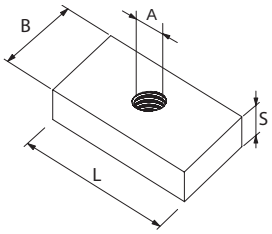

PROPERTIES

- **Material:** stainless steel A2: material-no 1.4301, acc. DIN EN 10088-1

Item	Art.-No.	Thread A	Thickness S [mm]	Max. recommended tension load for MS-L 27/18 N_{rec} [kN]	Max. recommended shear load V_{rec} [kN]	Tightening torque T_{inst} [Nm]	Sales unit [pcs]
HG 27 M 8 A2	**077636**	M 8	5	1.7	0.4	8	100
HG 27 M 10 A2	**064977**	M 10	5	2.0	0.5	10	100

Installation angle bracket MW A2

TECHNICAL DATA

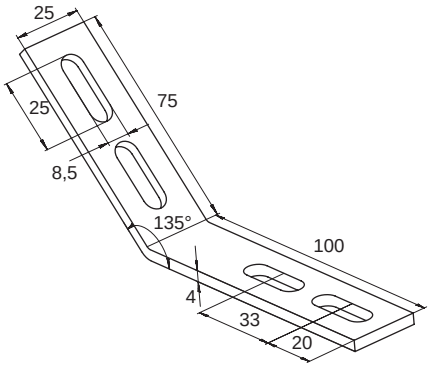

PROPERTIES

- **Material:** stainless steel A2: material-no 1.4301, acc. DIN EN 10088-1

Item	Art.-No.	Length l [mm]	Sales unit [pcs]
MW 27-45° A2	**077626**	100	25
MW 27-90° A2	**077625**	80	25

Saddle flange SF L A2

TECHNICAL DATA

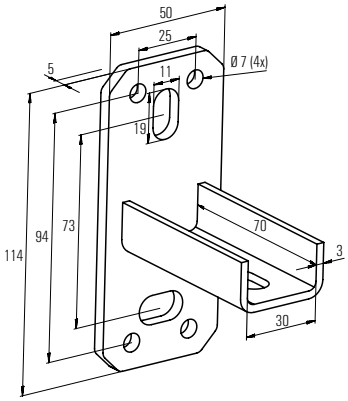

PROPERTIES

- **Material:** stainless steel A2: material-no 1.4301, acc. DIN EN 10088-1

Item	Art.-No.		Sales unit [pcs]
SF L 27 A2	**077615**		15

FUS Channel A2/A4

TECHNICAL DATA

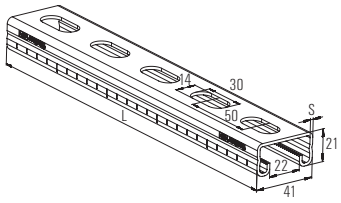

PROPERTIES

- **Material:** stainless steel A2: material-no 1.4301, acc. DIN EN 10088-1
- **Material:** stainless steel A4: material-no 1.4401, acc. DIN EN 10088-1

Item	Art.-No.	Fire test report	Length l [mm]	Profile thickness [mm]	Sales unit [pcs]
FUS 21/2,0 A2 - 2 m	504466	–	2000	2	1
FUS 21/2,0 A2 - 6 m	542735	–	6000	2	1
FUS 41/2,0 A2 - 2 m	504468	–	2000	2	1
FUS 41/2,0 A2 - 6 m	542736	–	6000	2	1
FUS 41/2,5 A2 - 2 m	504470	X	2000	2,5	1
FUS 41/2,5 A2 - 6 m	542737	X	6000	2,5	1
FUS 21/2,0 A4 - 2 m	504472	–	2000	2	1
FUS 21/2,0 A4 - 6 m	542738	–	6000	2	1
FUS 41/2,0 A4 - 2 m	504474	–	2000	2	1
FUS 41/2,0 A4 - 6 m	542739	–	6000	2	1
FUS 41/2,5 A4 - 2 m	504475	X	2000	2,5	1
FUS 41/2,5 A4 - 6 m	542740	X	6000	2,5	1

For loads and weight of channels and cantilever arms see page 91

Cantilever arm FCA A4

TECHNICAL DATA

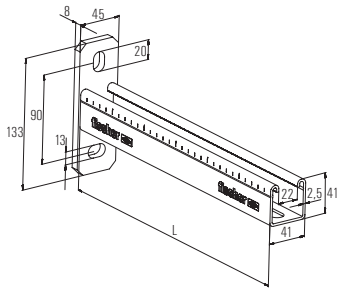

PROPERTIES

- **Material:** stainless steel A4: material-no 1.4401, acc. DIN EN 10088-1

Item	Art.-No.	Fire test report	Length l [mm]	Sales unit [pcs]
FCA 41 A4 - 300	505487	X	300	1
FCA 41 A4 - 450	505488	X	450	1
FCA 41 A4 - 600	505489	X	600	1

Saddle flange SF L A4

TECHNICAL DATA

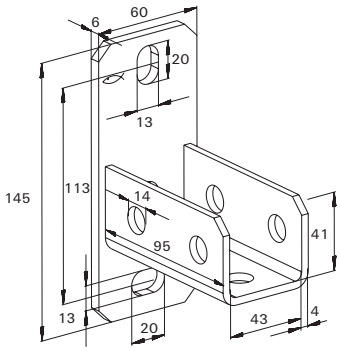

SF L 41

Item		Fire test report		For profile	Sales unit [pcs]
SF L 41 A4	**504522**	**X**		FUS 21 + FUS 41	10

Bracket FAF A4

TECHNICAL DATA

PROPERTIES

- **Material:** stainless steel A4: material-no 1.4401, acc. DIN EN 10088-1

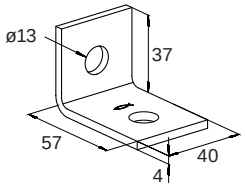

FAF 2 A4

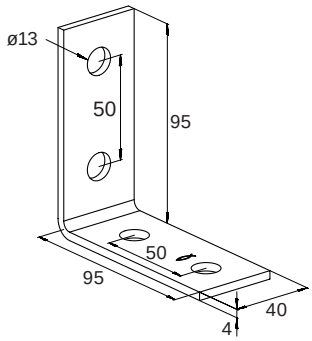

FAF 4 A4

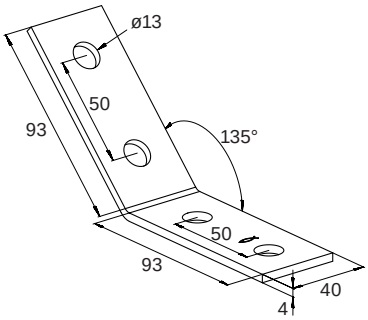

FAF 4/135° A4

Item	Art.-No.		Sales unit [pcs]
FAF 2 A4	**547512**		25
FAF 4 A4	**547513**		25
FAF 4/135° A4	**547514**		25

Construction element – Variable bracket VB A2

Massiv bracing of cantilever arm

APPLICATIONS

- Variable bracket for FUS channel profiles to built up supporting structures
- Bracket for installation with FUS channels from 0° to 180°
- For indoor and outdoor applications and in environments with high stress to components due to corrosion

ADVANTAGES/BENEFITS

- The design of the variable bracket PVB enables the fixation of mounting channels at an angle of 30° to 180°.
- Due to the perforations on all sides of the VB, rails can be mounted with the rail opening facing downwards or laterally.
- The punched holes in the base plate allow the direct fixing onto a wall, ceiling or onto a mounting channel.
- The stainless steel surface creates a high corrosion protection against environmental influences like humidity, water, saltwater, or other corrosive substances.

PROPERTIES

- **Material:** stainless steel A2: material-no 1.4301, acc. DIN EN 10088-1

TECHNICAL DATA

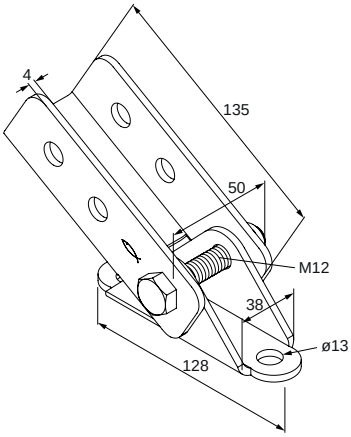

Item	Art.-No.		Sales unit [pcs]
VB A2	**545651**		5

LOADS

see Channel nut FCN Clix P

Beam clamp TKR A4

TECHNICAL DATA

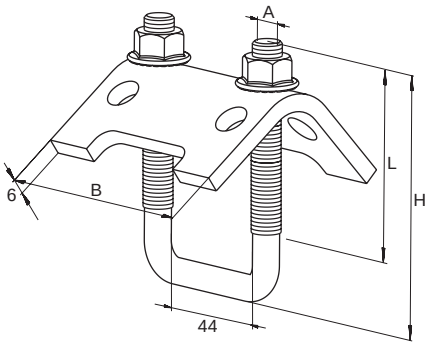

PROPERTIES

- **Material:** stainless steel A4: material-no 1.4401, acc. DIN EN 10088-1

Beam clamp **TKR**

Item	Art.-No.	For profile	Sales unit [pcs]
TKR 21 - 42 A4	**504476**	FUS 21 + FUS 41	20

Channel washer HK 41 A4

TECHNICAL DATA

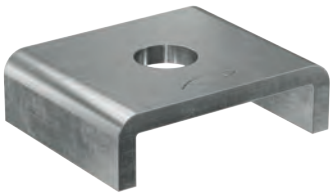

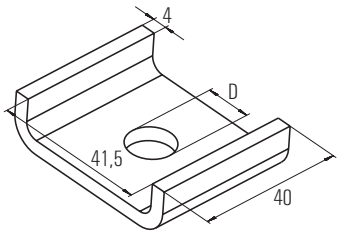

PROPERTIES

- **Material:** stainless steel A4: material-no 1.4401, acc. DIN EN 10088-1

Item	Art.-No.	Fire test report	For profile	Hole-Ø D [mm]	Sales unit [pcs]
HK 41 12,5 - A4	**547497**	**X**	all FUS channels	12.5	50

Clix channel nut FCN Clix A4

TECHNICAL DATA

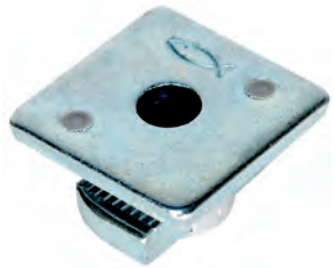

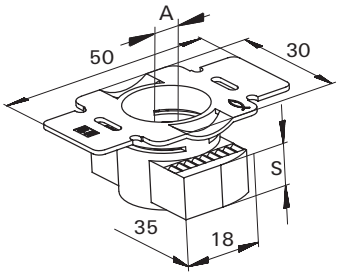

FCN Clix P

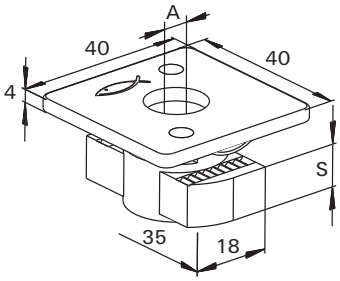

FCN Clix M

PROPERTIES

- **Material:** stainless steel A4: material-no 1.4401, acc. DIN EN 10088-1
- **Plastic:** Nylon PA 6

Item	Art.-No.	Fire test report	Thread A	Thickness S [mm]	Sales unit [pcs]
FCN Clix P 8 A4	**504436**	–	M 8	6	100
FCN Clix P 10 A4	**504437**	X	M 10	8	100
FCN Clix P 12 A4	**504439**	X	M 12	9.5	100
FCN Clix M 8 A4	**504440**	–	M 8	6	100
FCN Clix M 10 A4	**504447**	X	M 10	8	100

Stud screw STS A2/A4

TECHNICAL DATA

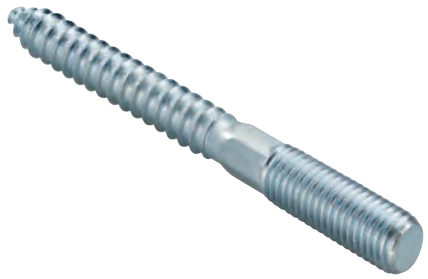

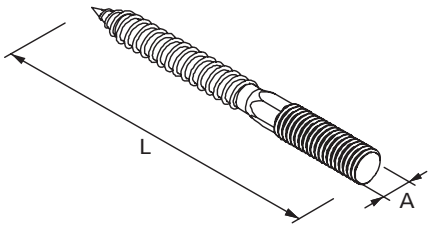

PROPERTIES

- **Material:** stainless steel A2: material-no 1.4301, acc. DIN EN 10088-1
- **Material:** stainless steel A4: material-no 1.4401, acc. DIN EN 10088-1

Item	Art.-No.	Thread A1	Length L [mm]	Sales unit [pcs]
STS 8 x 80 A2	**065132**	M 8	80	100
STS 8 x 100 A2	**077643**	M 8	100	100
STS 10 x 100 A2	**065153**	M 10	100	100
STS 8 x 100 A4	**077715**	M 8	100	100
STS 10 x 100 A4	**077716**	M 10	100	100

Threaded rod G A2/A4

TECHNICAL DATA

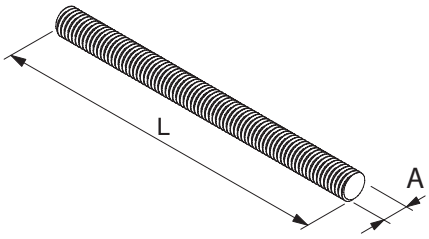

PROPERTIES

- **Material:** stainless steel A2: material-no 1.4301, acc. DIN EN 10088-1
- **Material:** stainless steel A4: material-no 1.4401, acc. DIN EN 10088-1
- **Property class:** min. 70 (A2 / A4)

Item	Art.-No.	Thread A	Length l [mm]	Sales unit [pcs]
G 8 A2	**077644**	M 8	1000	5
G 10 A2	**065173**	M 10	1000	5
G 8 A4	**077645**	M 8	1000	5
G 10 A4	**065174**	M 10	1000	5

Threaded stud GS A4

TECHNICAL DATA

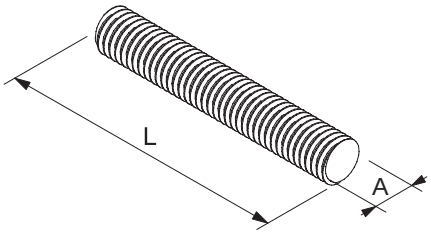

PROPERTIES

- **Material:** stainless steel A4: material-no 1.4401, acc. DIN EN 10088-1
- **Property class:** min. 70 (A2 / A4)

Item	Art.-No.	Thread A	Length l [mm]	Sales unit [pcs]
GS 8/40 A4	**505536**	M 8	40	100
GS 8/60 A4	**505537**	M 8	60	100
GS 10/40 A4	**505538**	M 10	40	100
GS 10/60 A4	**505539**	M 10	60	100

Hexagonal connector VM A4

TECHNICAL DATA

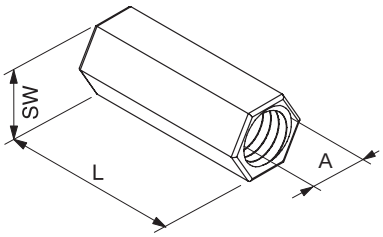

PROPERTIES

- **Material:** stainless steel A4: material-no 1.4401, acc. DIN EN 10088-1

Item	Art.-No.	Length l [mm]	Thread A	Width across nut ○ SW [mm]	Sales unit [pcs]
VM M8 A4	**505540**	30	M 8	11	100
VM M10 A4	**505541**	30	M 10	13	100

Washer U A4

TECHNICAL DATA

PROPERTIES

- **Material:** stainless steel A4: material-no 1.4401, alternative 1.4571 acc. DIN EN 10028-7

Item	Art.-No.	Thickness S [mm]	External-Ø d [mm]	Hole-Ø D [mm]	Sales unit [pcs]
U 8 x 28 A4	**505542**	2	28	8.4	100
U 8 x 40 A4	**505543**	3	40	8.4	100
U 10 x 28 A4	**505544**	2	30	10.5	100
U 10 x 40 A4	**505545**	3	40	10.5	100
U 12 x 24 A4	**505546**	2	24	12.5	100

Hexagonal nut MU A4

TECHNICAL DATA

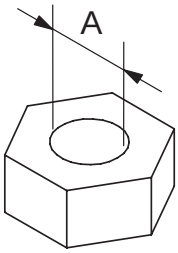

PROPERTIES

- **Material:** stainless steel A4, acc. to DIN EN ISO 3506-2
- **Property class:** min. 50, acc. to DIN EN ISO 3506-2

Item	Art.-No.	Thread A	Width across nut ⬡ SW [mm]	Sales unit [pcs]
MU M 8 A4	**077642**	M 8	13	100
MU M 10 A4	**077641**	M 10	17	100

Hexagonal screw SKS A4

TECHNICAL DATA

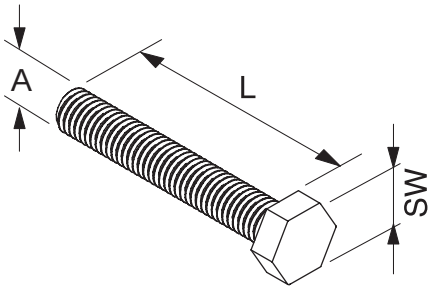

PROPERTIES

- **Material:** stainless steel A4, material-no. 1.4401, acc. to DIN EN ISO 3506-1
- **Property class:** min. 70, acc. to DIN EN ISO 3506-1)

Item	Art.-No.	Thread A	Width across nut ⬡ SW [mm]	Sales unit [pcs]
SKS M 10 x 30 A4	**505547**	M 10	17	100
SKS M 12 x 30 A4	**505548**	M 12	19	100

fischer
innovative solutions

5 Air conditioner fixings

		Page
KIT FOR AIR CONDITIONER FIXING		
Air conditioner fixing MCE		**254**
Air conditioner fixing KSU		**256**
Sound absorption element PA		**257**

The complete kit for air conditioner fixing on walls

Airconditioner on the outer wall

APPLICATIONS

- Universal fixing for air conditioners
- MCE Klima Klik - air conditioner fixing onto walls with max. fixing distance of 760 mm on the horizontal channel
- Please consider: load bearing capacity of the wall and the quality of the substrate

ADVANTAGES/BENEFITS

- The complete kit including anti vibration dumper, SX plug and screws offers an optimised installation security.
- The brackets with quick snap (Klik) simplify and shorten the installation.
- The horizontal channel of the MCE Klima Klik allows a flexible adjustment of the brackets and simplifies the installation additionally.
- The MCE Klima Klik horizontal channel with snap-on bubble level enables the adjustment without additional tools.

PROPERTIES

- **Material:** steel
- **Coating:** powder coating
- **Colour:** RAL 9002

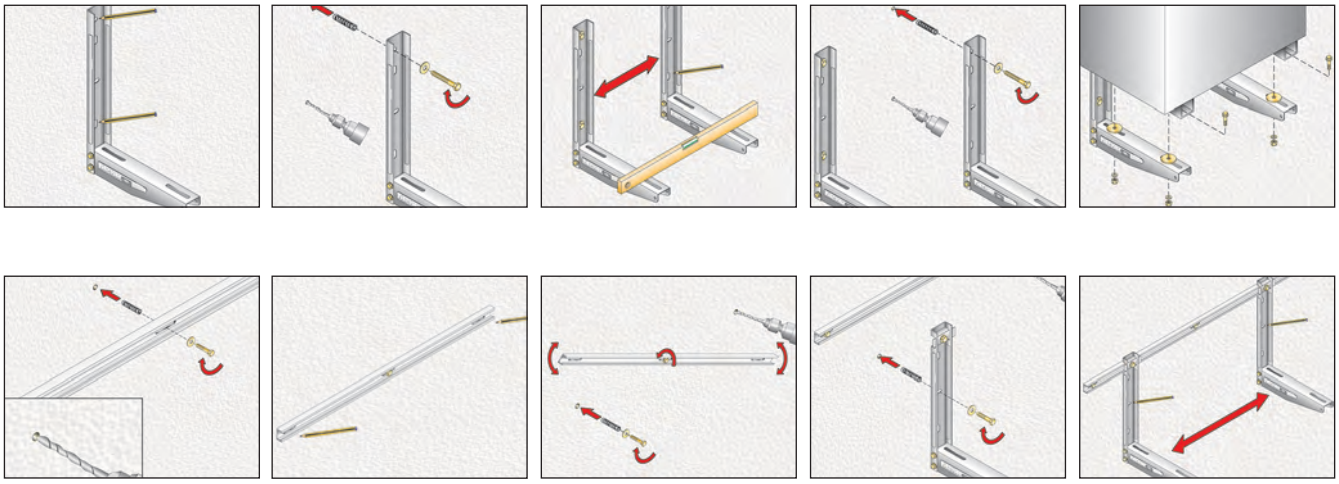

TECHNICAL DATA

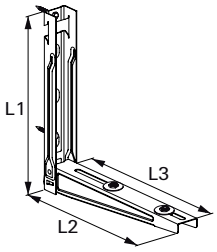

KLIMA EASY KLIK

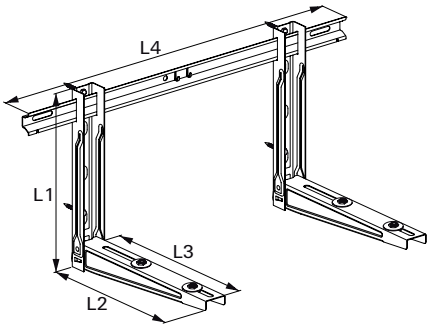

KLIMA KLIK

Item	Art.-No.	Length L_1 [mm]	Length L_2 [mm]	Length L3 [mm]	Length L4 [mm]
KLIMA EASY KLIK	**521760**	400	420	380	–
KLIMA KLIK 420	**521761**	400	420	380	780

LOADS

Item	Art.-No.	Max. recommended static load load case 1 F_{rec} [kN]	Max. recommended static load load case 2 F_{rec} [kN]
KLIMA EASY KLIK	**521760** 1)	1.0	1.0
KLIMA KLIK 420	**521761** 1)	1.0	1.0

1) The loads are valid for the use in pairs (two consoles).

Load case 1

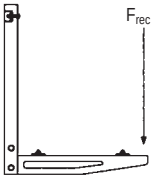

Load case 2

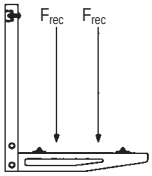

The complete kit for fixing of Air conditioners, pumps or ventilators on walls

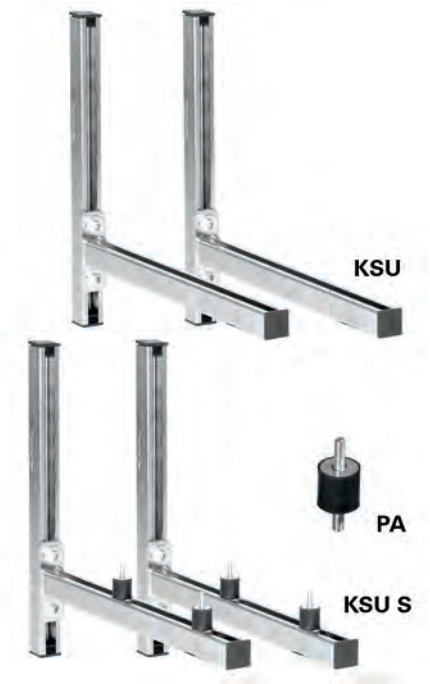

Satellite dishes and air conditioning units

APPLICATIONS

- Secure attachment of air conditioners (pumps and fans) to walls with or without sound insulation element

ADVANTAGES/BENEFITS

- The KSU-S complete kit includes 4 noise protection pieces, and offers an optimised noise reduction.
- The horizontal channel with different lengths and the SM sliding nut of the KSU set allow a flexible adjustment of the noise protection pieces to simplify the installation.
- The included T-head bolt for the fixing of the cantilevers offers the possibility of an easy adjustment and a time saving installation.
- The KSU set consists of finished cut channels for instant use and avoids the accumulation of single pieces.

PROPERTIES

- **Material:** steel DX51D+Z 275 MA-C (material no. 1.0226+Z) acc. to DIN EN 10327
- **Zinc plating:** sendzimir-galvanised, app. 15 µm

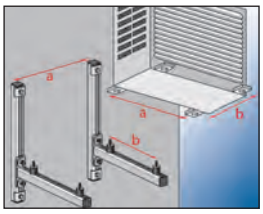

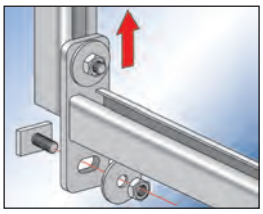

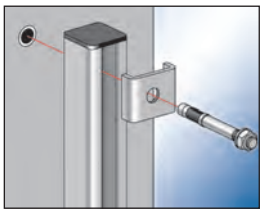

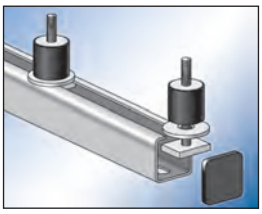

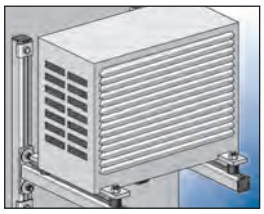

TECHNICAL DATA

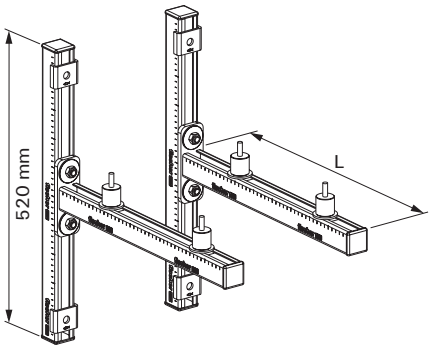

KSU

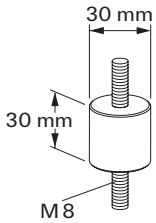

PA 30 x 30

Item	Art.-No.	Length l [mm]	Construction with noise protection	Sales unit [pcs]
KSU 440	**512712**	440	–	1
KSU 520	**512713**	520	–	1
KSU 600	**512714**	600	–	1
KSU S 440	**512709**	440	yes	1
KSU S 520	**512710**	520	yes	1
KSU S 600	**512711**	600	yes	1
PA 30 x 30	**512715**	–	–	4

LOADS

Item	Art.-No.	Max. recommended static load load case 1 F_{rec} [kN]	Max. recommended static load load case 2 F_{rec} [kN]
KSU 440	**512712** 1)	1.5	1.5
KSU 520	**512713** 1)	1.5	1.5
KSU 600	**512714** 1)	1.5	1.5
KSU S 440	**512709** 1)	1.5	1.5
KSU S 520	**512710** 1)	1.5	1.5
KSU S 600	**512711** 1)	1.5	1.5

1) The loads are valid for the use in pairs (two consoles).

Load case 1

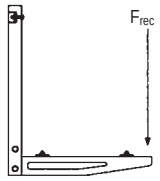

Load case 2

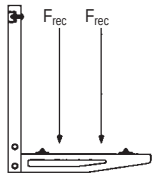

fischer
innovative solutions

6 Electrical fixings

	Page
ClipFix plus LS/ES/ZS	260
ClipFix plus SD	262
Cable clasp KB	264
Cable harness SHA	266
Pipe clip RC	268
Pipe clip FC	270
Saddle clip SCH	272
Nail clip NS/MNS	274
Nail disc NSB	276
Spacer pipe clamp AM	278
Conduit clip BSM	280
Impact nail ED	282
Cable tie BN/UBN	284
Wireclip	286

ClipFix plus LS/ES/ZS

The user-friendly clip fixing for pipes and conduits

Cable fixing

Fixing flexible pipes

BUILDING MATERIALS

- Concrete
- Solid pumice block
- Solid sand-lime brick
- Natural stone with dense structure
- Solid brick

CHARACTERISTICS

960° SELF EXTINGUISHING

PURE MATERIAL fischer NYLON QUALITY HIGH QUALITY NYLON

ADVANTAGES

- The complete element combines anchor, screw and clamp. This saves materials, allows for one-handed installation, and reduces assembly time.
- The slimline geometry of the fixing element only protrudes slightly, thus saving space.
- The three different sizes of each of the cable strap LS, twin clamp ZS and single clamp ES cover a range of cable diameters, thus reducing storage.
- The long-lasting nylon material is flame resistant, halogen- and silicone-free, can be used all year round, including during a frost. This ensures a high level of safety.

APPLICATIONS

For fixing of:

- Individual electric cables
- Cable bundles
- Flexible pipes
- Rigid plastic pipes

FUNCTIONING

- The clip fixing is set into the drill hole without the need for any additional screws and fixes the pipe directly to the base material.
- The clamping force of the locking catch allows the ClipFix to hold itself in the drill hole.
- Place the clasp of the cable strap LS into the drill hole so that it is level and the teeth grip.
- Recommended loads (required safety factor considered): cable strap LS up to 6 kg, twin clamp ZS and single clamp ES up to 11 kg.
- Temperature resistance once installed from -20 °C to +80 °C.

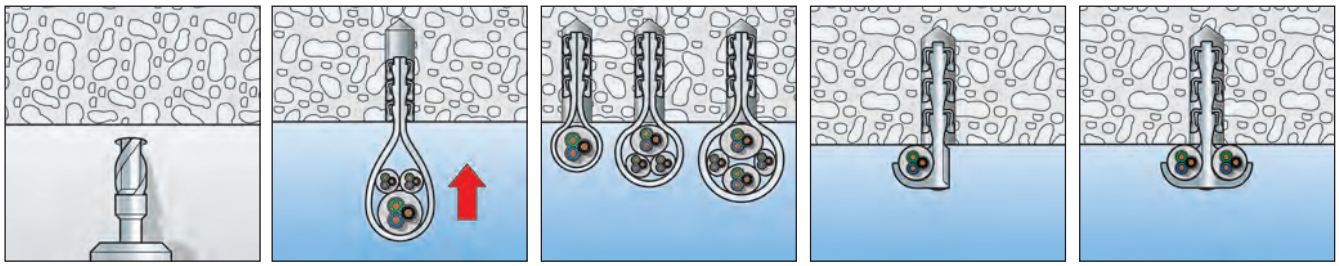

TECHNICAL DATA

Clip fix plus cable strap **SF plus LS**

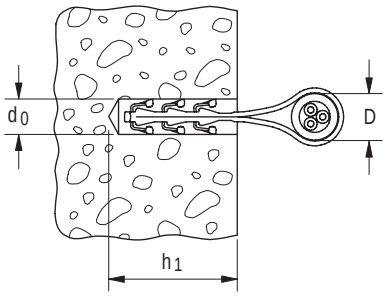

Clip fix plus single clamp **SF plus ES**

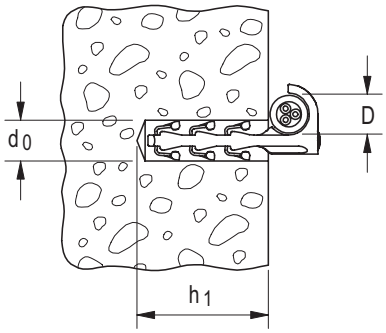

ClipFix plus twin clamp **SF plus ZS**

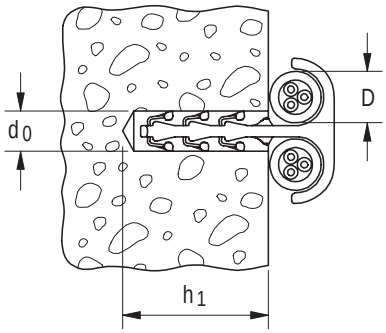

Item	Art.-No.	Drill hole d_0 [Ø mm]	Min. drill hole depth h_1 [mm]	Clamping range D [mm]	Sales unit [pcs]			
SF plus LS 3/13	**058155**	6	35	3 - 13	100			
SF plus LS 8/28	**058156**	6	50	8 - 28	100			
SF plus LS 20/40	**058157**	6	50	20 - 40	100			
SF plus ES 10	**048151**	6	40	3 - 12	100			
SF plus ES 18	**048152**	6	40	10 - 25	100			
SF plus ES 28	**058183**	6	40	15 - 31	100			
SF plus ZS 10	**058184**	6	35	3 - 12	100			
SF plus ZS 18	**048161**	6	40	10 - 25	100			
SF plus ZS 28	**048162**	6	40	15 - 31	75			

The user-friendly clip fixing for cable ducts and cable clasps

Fixing cable ducts

Fixing cable harnesses

BUILDING MATERIALS

- Concrete
- Solid pumice block
- Solid sand-lime brick
- Natural stone with dense structure
- Solid brick

CHARACTERISTICS

ADVANTAGES

- The ClipFix plus SD combines anchor and screw. This saves on materials and makes it easier to affix cable ducts that are difficult to access without the need for additional tools.
- The simple clip fixing reduces installation time.
- The extended shank of the FS plus SD 40 allows bridging of non-bearing plaster layers, as well as the fixing of thicker attachments.
- The long-lasting nylon material is flame resistant, halogen- and silicone-free. It can be used all year round, including during a frost. This ensures a high level of safety.

APPLICATIONS

For fixing of:

- Cable channels
- Cable clasps
- Installation base cable harness
- Flat building components

FUNCTIONING

- To fix, manually place the ClipFix plus SD directly into the drill hole. No additional screws are needed.
- The clamping force of the locking catch allows the ClipFix to hold itself in the drill hole.
- Recommended loads (required safety factor considered): clip fixing SD up to 11 kg.
- Temperature resistance once installed from -20 °C to +80 °C.

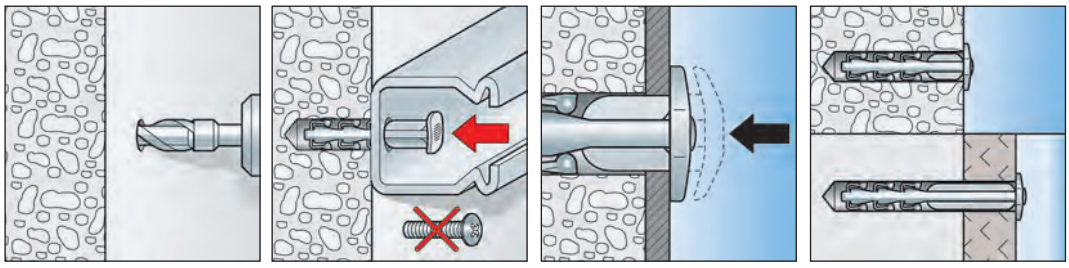

TECHNICAL DATA

fischer ClipFix plus clip fixing **SF plus SD**

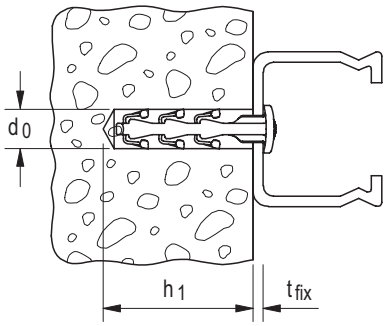

Item	Art.-No.	Drill hole d_0 [Ø mm]	Min. drill hole depth h_1 [mm]	Max. usable length t_{fix} [mm]	Sales unit [pcs]			
SF plus SD 30	**058178**	6	35	4	200			
SF plus SD 40	**058179**	6	35	15	100			

Cable clasp KB

The flat cable clasp for space-saving cable fixing

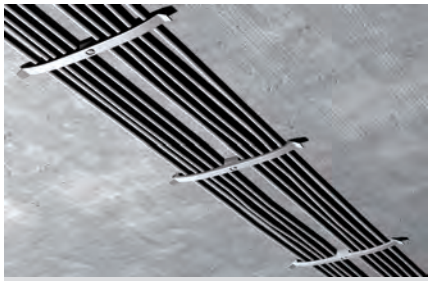

Fixing cable harnesses

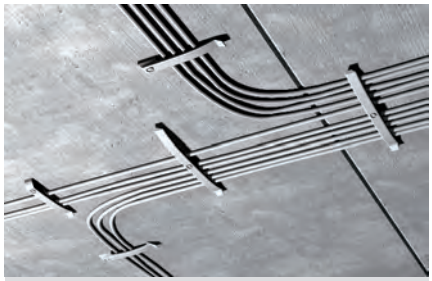

Fixing cable harnesses

BUILDING MATERIALS

When using ClipFix SD:

- Concrete
- Solid pumice block
- Solid sand-lime brick
- Natural stone with dense structure
- Solid brick

CHARACTERISTICS

ADVANTAGES

- The flat design of the KB cable clasp allows for a space-saving cable fixing, and simplifies subsequent cable-laying.
- The combination of cable clasp KB and ClipFix SD allows for one-handed installation, thus enabling a flexible and economic installation.
- The long-lasting nylon material is halogen- and silicone-free. It can be used all year round, including during a frost. This ensures a high level of safety.

APPLICATIONS

- For the fixing of several individual cables

FUNCTIONALITY

- The cable clasp KB is adapted to suit the fixture with clip fixing SD or Hammerfix N6.
- Place the ClipFix plus SD directly into the drill hole by hand. No additional screws are needed.
- The Hammerfix N is expanded when the nail is driven in, and holds by friction in the drill hole.
- After installation, the cables are pulled under the clasp. Additional cables can be easily laid after installation too.
- Temperature resistance once installed from -20 °C to +80 °C.

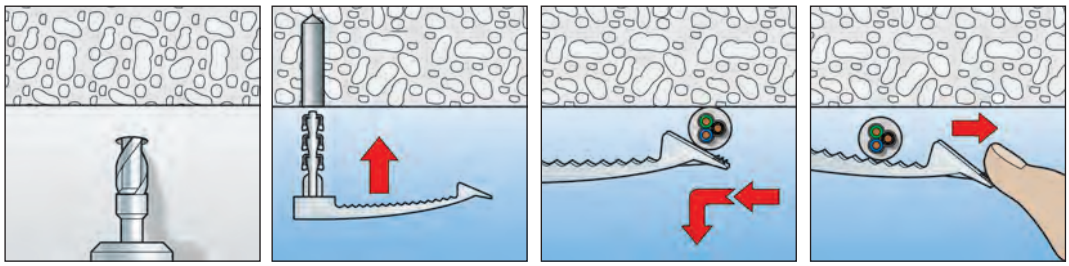

TECHNICAL DATA

ClipFix plus cable clasp **SF plus KB 8**

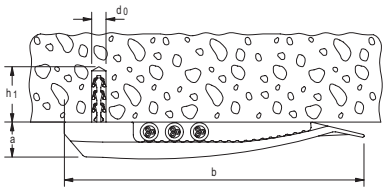

ClipFix plus cable clasp **SF plus KB 16**

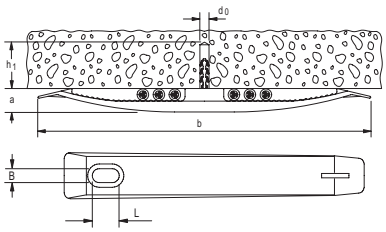

Cable clasp **KB 8**

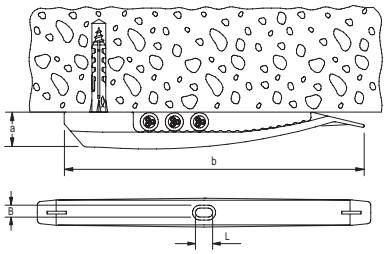

Cable clasp **KB 16**

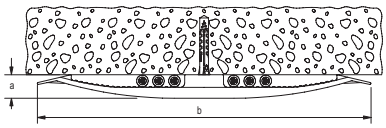

Item	Art.-No.	Drill hole d_0 [Ø mm]	Min. drill hole depth h_1 [mm]	Dimensions a x b [mm]	Dimension of slot B x L [mm]	Max. number of ducts	Sales unit [pcs]
SF plus KB 8	**048171**	6	35	15 x 133	6 x 10	8 ducts NYM 3 x 1,5	50
SF plus KB 16	**048172**	6	35	15 x 230	6 x 10	16 ducts NYM 3 x 1,5	25
KB 8	**058135**	–	–	15 x 133	6 x 10	8 ducts NYM 3 x 1,5	50
KB 16	**058136**	–	–	15 x 230	6 x 10	16 ducts NYM 3 x 1,5	50

Cable harness SHA

The adaptable cable harness for fixing cable bundles

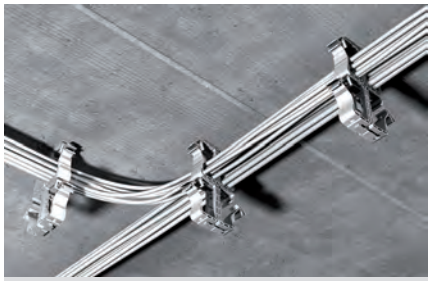

Fixing cable bundles

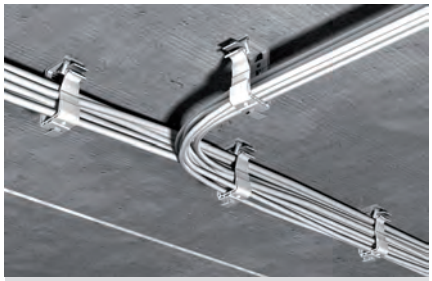

Fixing cable bundles

BUILDING MATERIALS

When using ClipFix SD:
- Concrete
- Solid pumice block
- Solid sand-lime brick
- Natural stone with dense structure
- Solid brick

CHARACTERISTICS

ADVANTAGES

- Simple bundling and economical laying of multiple electric cables.
- The seal of the cable harness SHA makes it easy to lay cables at a later date, thus ensuring high user-friendliness.
- Combining several SHA cable harnesses allows for a cost-effective fixing of cables to just one MS installation base.
- The MS installation base allows for various fixing options, and offers great flexibility for the installation.
- The long-lasting nylon material is halogen- and silicone-free, can be used all year round, including during a frost, and thus ensures a high level of safety.

APPLICATIONS

For fixing of:
- Electric cables, loose and bundled

FUNCTIONING

- Cable bundles can be laid in the cable harness SHA. The seal makes it easy to lay cables at a later date.
- The cable harness SHA can either be affixed with ClipFix plus, installation base MS or with plugs and screws.
- Several SHA cable harnesses can be combined below one another.
- The SHA cable harnesses can also be lined up adjacent to one another with the connection piece SHA KP.
- The maximum installation distance of 80 cm must not be exceeded.
- Temperature resistance once installed from -20 °C to +80 °C.

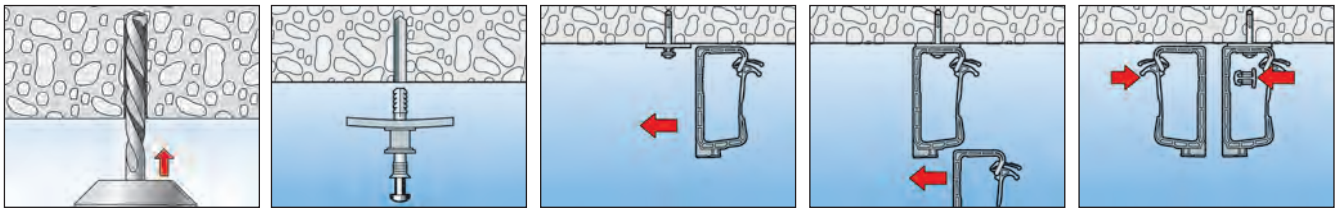

TECHNICAL DATA

Cable harness **SHA**

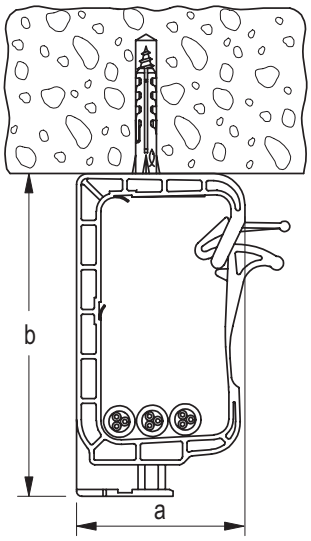

Installation base **SHA MS**

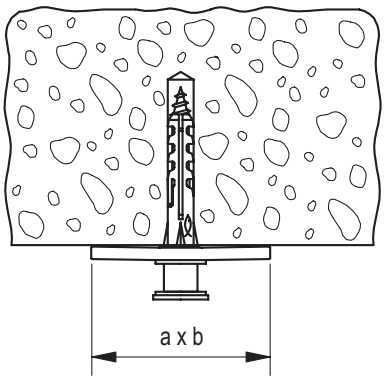

Steckfix plus installation base **SF plus MS**

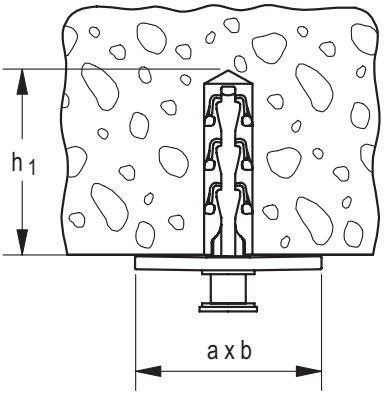

Connection piece **SHA KP**

Item	Art.-No.	Drill hole d_0 [Ø mm]	Min. drill hole depth h_1 [mm]	Dimensions a x b [mm]	Max. number of ducts	Sales unit [pcs]	
SHA 15	**058139**	–	–	93 x 49	15 ducts NYM 3 x 1,5	50	
SHA 30	**058140**	–	–	128 x 59	30 ducts NYM 3 x 1,5	25	
SHA MS	**058141**	–	–	41 x 27	connection piece	50	
SF plus MS	**048181**	6	35	41 x 27	installation base with clip-plug	50	
SHA KP	**058142**	–	–	–	installation base	50	

The convenient pipe fixing

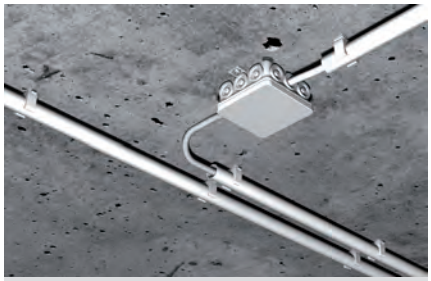

Fixing plastic insulating conduits

Fixing plastic insulating conduits

BUILDING MATERIALS

When using ClipFix SD:

- Concrete
- Solid pumice block
- Solid sand-lime brick
- Natural stone with dense structure
- Solid brick

CHARACTERISTICS

ADVANTAGES

- The pipe clip RC can be used with pre-installed clip fixing SD, with Hammerfix N 6 or in 11 mm C-shaped profile-rails, and thus allows for a flexible and cost-effective installation.
- The 6 mm-long hole allows for the optimal alignment of the pipe fixing and ensures a more user-friendly installation.
- Two additional pipe clips can be added to the sides of a pre-fixed pipe clip. This saves assembly time and materials.
- The long-lasting nylon material is halogen- and silicone-free. It can be used all year round, including during a frost. This ensures a high level of safety.

APPLICATIONS

For fixing of:

- Flexible and rigid plastic insulating pipes

FUNCTIONING

- Plastic insulation pipes are laid into the pipe clip. The pre-tensioning of the pipe clip holds the pipes securely.
- The pipe clip RC is adapted to be fixed with either clip fixing SD or Hammerfix N 6.
- Manually place the ClipFix plus SD directly into the drill hole. No additional screws are needed.
- The Hammerfix N is expanded when the nail is driven in, and holds by friction in the drill hole.
- Temperature resistance once installed from -20 °C to +80 °C.

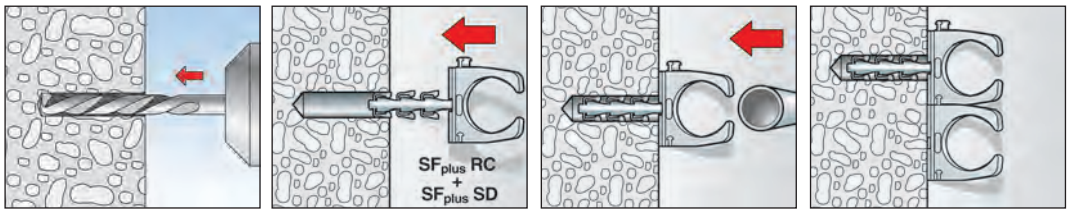

TECHNICAL DATA

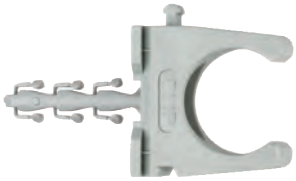

Clipfix plus pipe clip **RC**

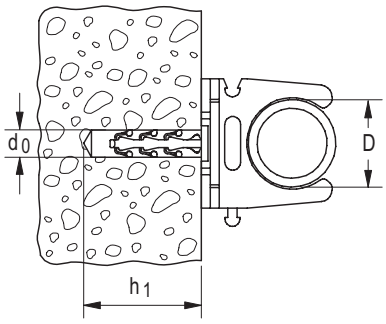

Pipe clip **RC PG**

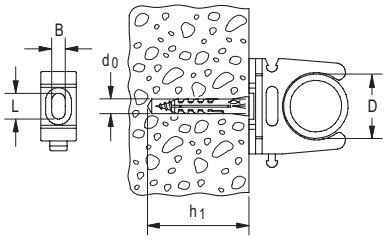

Item	Art.-No.	Drill hole d_0 [Ø mm]	Min. drill hole depth h_1 [mm]	Suitable for IEC	Clamping range D [mm]	Dimension of slot B x L [mm]	Sales unit [pcs]
SF plus RC IEC 12	**048190**	6	35	12	12 - 13	6 x 7	100
SF plus RC IEC 16	**048191**	6	35	16	15 - 16	6 x 8	100
SF plus RC IEC 20	**048193**	6	35	20	20 - 21	6 x 10	100
SF plus RC IEC 25	**048197**	6	35	25	24 - 25	6 x 10	50
SF plus RC IEC 32	**048198**	6	35	32	31 - 32	6 x 10	25
SF plus RC IEC 40	**048199**	6	35	40	38 - 40	6 x 10	25
RC IEC 12	**058194**	–	–	12	12 - 13	6 x 7	100
RC IEC 16	**058120**	–	–	16	15 - 16	6 x 8	100
RC IEC 20	**058122**	–	–	20	20 - 21	6 x 10	100
RC IEC 25	**058198**	–	–	25	24 - 25	6 x 10	50
RC IEC 32	**058199**	–	–	32	31 - 32	6 x 10	40
RC IEC 40	**058200**	–	–	40	39 - 40	6 x 10	40
RC IEC 50	**079194** 1	–	–	50	50 - 51	6 x 10	20
RC IEC 63	**079196** 1	–	–	63	62 - 64	6 x 10	15

1) Does not include latching catches, therefore cannot be mounted side by side.

The flexible pipe clip for various diameters

Cable fixing

Fixing plastic insulating conduits

BUILDING MATERIALS

When using Hammerfix N:

- Concrete
- Vertically perforated brick
- Hollow blocks made from lightweight concrete
- Perforated sand-lime brick
- Solid sand-lime brick
- Building brick
- Natural stone
- Aerated concrete
- Solid panel made from gypsum
- Solid brick made from lightweight concrete

CHARACTERISTICS

ADVANTAGES

- The flexible pipe clip socket ensures a secure hold for various cable and pipe diameters, and reduces the number of products required.
- The pipe clip FC can be installed with both N 5 Hammerfixes and 11 mm-C-shaped profile-rails, and thus offers great flexibility.
- Two additional pipe clips can be added to the sides of a pre-fixed clip clamp. This saves assembly time and materials.
- The long-lasting nylon material is halogen-free. It can be used all year round, including during a frost. This ensures a high level of safety.

APPLICATIONS

For fixing of:

- Electric cables
- Flexible and rigid plastic insulating pipes

FUNCTIONALITY

- The clip clamp FC is adapted to suit the fixture using N5 Hammerfixes.
- The Hammerfix N is expanded when the nail is driven in, and holds by friction in the drill hole.
- The cables or pipes are then laid in the clip clamp FC. The pre-tensioning of the clip clamp holds the cables or pipes securely.
- Temperature resistance once installed from -40 °C to +80 °C.

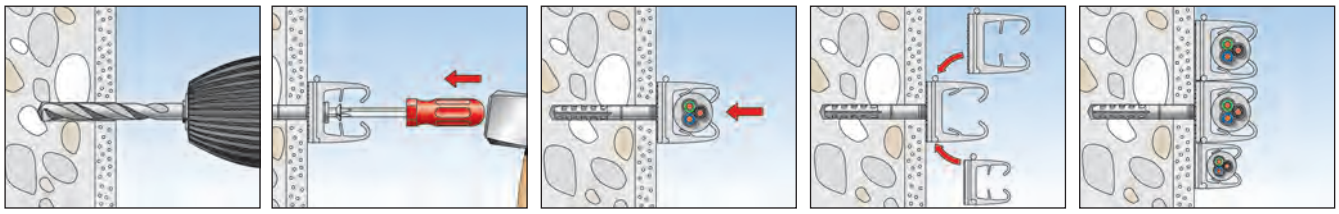

TECHNICAL DATA

Pipe clip **FC**

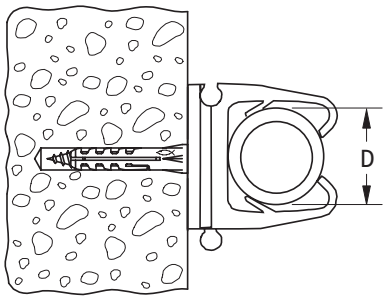

Item	Art.-No.	Clamping range D [mm]	Sales unit [pcs]					
FC 6 - 9 GR	**068060**	6 - 9	100					
FC 9 - 12 GR	**068062**	9 - 12	100					
FC 12 - 16 GR	**068064**	12 - 16	50					
FC 16 - 20 GR	**068066**	16 - 20	25					

Saddle clip SCH

The flexible cable clamp for various diameters

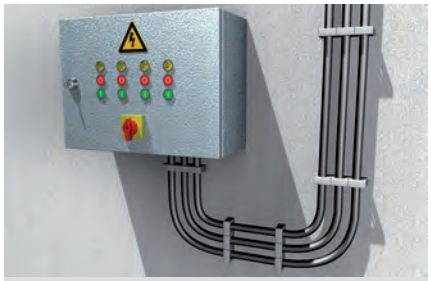

Fixing cable harnesses

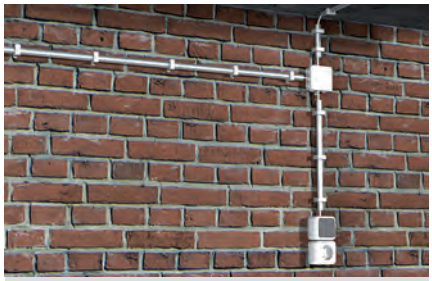

Cable fixing

BUILDING MATERIALS

When using Hammerfix N:

- Concrete
- Vertically perforated brick
- Hollow blocks made from lightweight concrete
- Perforated sand-lime brick
- Solid sand-lime brick
- Building brick
- Natural stone
- Aerated concrete
- Solid panel made from gypsum
- Solid brick made from lightweight concrete

CHARACTERISTICS

ADVANTAGES

- With its elastic spring tabs, the saddle clip SCH can bear different cable diameters. This increases flexibility and reduces the number of products required.
- Additional clips can be added to the sides of a pre-fixed clip. This saves installation time and materials.
- The long-lasting nylon material is halogen- and silicone-free. It can be used all year round, including during a frost. This ensures a high level of safety.

APPLICATIONS

For fixing of:

- Electric cables
- Flexible and rigid plastic insulating pipes

FUNCTIONALITY

- The clamp SCH is adapted to suit the fixture using N 5 Hammerfixes.
- The Hammerfix N is expanded when the nail is driven in, and holds by friction in the drill hole.
- The cables or pipes are then laid in the clamp SCH and fixed by inserting the locking latch.
- The internal tabs adapt to fit various cable or pipe diameters.
- Temperature resistance once installed from -40 °C to +80 °C.

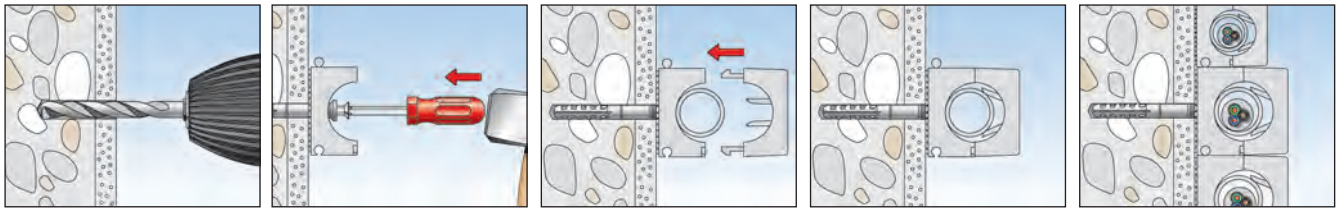

TECHNICAL DATA

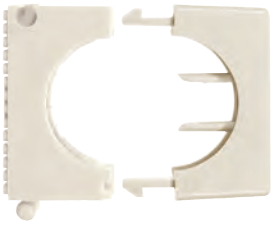

Saddle **SCH**, colour: Nylon transparent

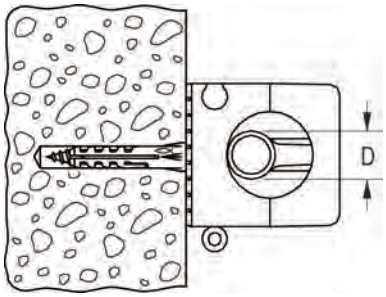

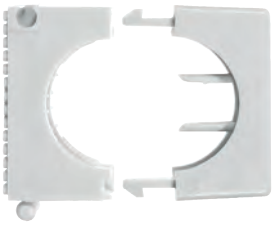

Saddle **SCH**, colour: grey RAL 7035

	Art.-No.		Clamping range	Dimension of insulated pipes	Sales unit	
	Grey RAL 7035	Nylon trans-parent	D [mm]		[pcs]	
Item						
SCH 812	**068012**	**060012**	8 - 12	6 x 1 - 8 x 1	100	
SCH 1216	**068016**	**060016**	12 - 16	10 x 1 - 12 x 1	50	
SCH 1619	**068019**	**060019**	16 - 19	–	50	
SCH 1623	**068023**	**060023**	16 - 23	15 x 1 - 18 x 1	50	
SCH 2332	**068032**	**060032**	23 - 32	22 x 1 - 22 x 1,5	25	
SCH 3242	**–**	**060042**	32 - 42	22 x 1 - 22 x 1,5	25	

Nail clip NS/MNS

The fast fixing for electric cables

Cable fixing

Cable fixing

BUILDING MATERIALS

- Hardboard
- Wood
- Aerated concrete
- Chipboard
- Plywood
- Solid gypsum panels and other plastered substrates

ADVANTAGES

- The nail clip features a pre-assembled zinc-plated nail, allowing for a fast fixing, thus reducing assembly time.
- The small space required for fixing simplifies installation in narrow spaces.
- The nail clip MNS covers cable diameters from 4 mm to 14 mm with just 3 sizes.

APPLICATIONS

- To fix single electric cables with varying diameters

FUNCTIONING

- Position the nail clip with the laid cable. Hammer in the pre-assembled nail with a hammer.

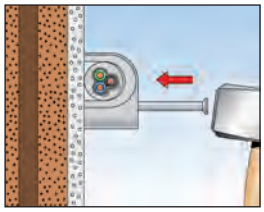

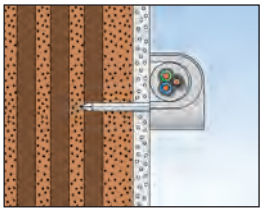

TECHNICAL DATA

Nail clip **NS**

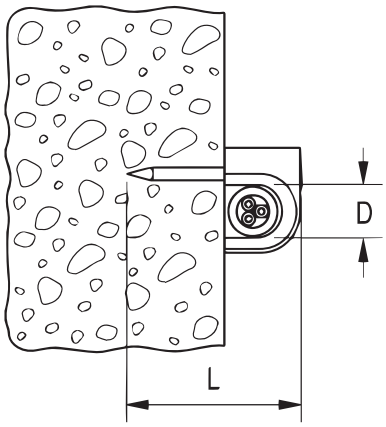

Nail clip **MNS**

Item	Art.-No.	For cable [Ø mm]	Clamping range D [mm]	Length of nail L [mm]	Sales unit [pcs]			
NS 7	**058173**	7	7	25	100			
NS 8	**058174**	8	8	25	100			
NS 9	**058175**	9	9	25	100			
NS 10	**058176**	10	10	30	100			
NS 12	**058177**	12	12	35	100			
MNS 4-7	**094673**	–	4 - 7	25	100			
MNS 7-11	**094674**	–	7 - 11	25	100			
MNS 10-14	**094675**	–	10 - 14	30	100			

Nail disc NSB

The secure cable fixing in wall slots

Cable fixing

Cable fixing in slots

BUILDING MATERIALS

- Vertically perforated brick
- Pumice
- Lightweight aggregate concrete
- Aerated concrete
- Hardboard
- Wood
- Chipboard
- Plywood
- Solid panel made from gypsum

ADVANTAGES

- The nail disc NSB allows for use in two slot widths.
- The vaulted structure of the nail disc ensures an optimal contact pressure and, as such, for a secure hold.
- The flat nail disc only protrudes slightly, and can thus be easily plastered over.
- The nail disc NSB is made from high-strength polypropylene. The nail is made from hardened, galvanised steel. The tried and tested material combination for in-wall installation.

APPLICATIONS

- For fixing cables in wall slots

FUNCTIONALITY

- Remove cable.
- Align the nail disc with either dimensions 27 mm or 34 mm, depending on the slot width, and hit the nail in with a hammer.
- The cables are fixed in the wall slots by the curved washer.

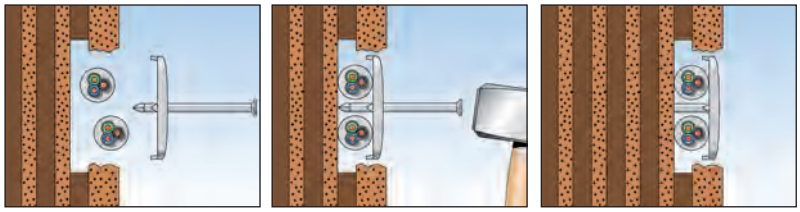

TECHNICAL DATA

Nail disc **NSB**

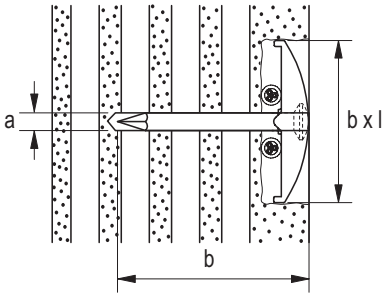

Item	Art.-No.	Dimension of nail a x b [mm]	Dimension of disc b x l [mm]	Sales unit [pcs]				
NSB 2/40	**048308**	2 x 40	27 x 34	200				
NSB 2/50	**048309**	2 x 50	27 x 34	150				
NSB 2/60	**048310**	2 x 60	27 x 34	100				
NSB 3/40	**048311**	3 x 40	27 x 34	150				
NSB 3/50	**048312**	3 x 50	27 x 34	150				
NSB 3/60	**048313**	3 x 60	27 x 34	100				

Spacer pipe clamp AM

The installation-friendly metal spacing disc for cables and pipes

Fixing steel armoured conduits

Fixing conduits

BUILDING MATERIALS

When using nail anchor FNA II:
- Concrete
- Solid sand-lime brick
- Natural stone with dense structure
- Pre-stressed concrete hollow slabs

When using Hammerfix N:
- Concrete
- Solid sand-lime brick
- Building brick
- Natural stone
- Solid brick made from lightweight concrete

ADVANTAGES

- The fast-locking latch ensures easy opening and closing without completely removing the screw, and allows for a simple and fast installation.
- The pre-fitted combination screw with conventional slotted or recessed screw head allows for the use of different screwdrivers, thus allowing for a simple installation.

APPLICATIONS

For fixing of:
- Steel conduits
- Electric cables
- Copper and metal pipes

FUNCTIONING

- The spacer clamp AM with M6 thread can either be affixed with fischer nail anchor FNA II 6x30 M6x43, stud screw STST 6x60 and STST 6x80 or with Hammerfix N 6x40/10 M6.

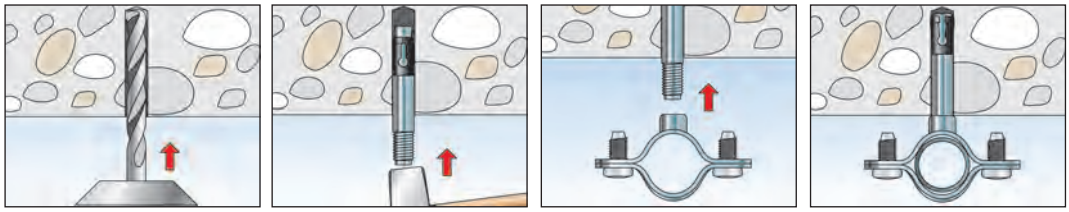

Spacer pipe clamp AM

TECHNICAL DATA

Metal two-piece pipe clamp **AM**

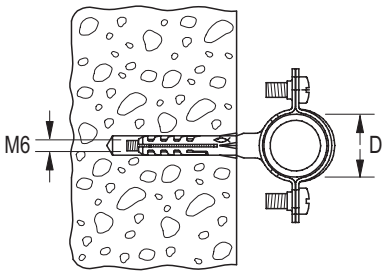

Item	Art.-No.	Dimension IEC	Clamping range D [mm]	Sales unit [pcs]				
AM 8	**060185**	–	8 - 10	50				
AM 10	**060186**	–	10 - 11	50				
AM 12	**060187**	12	12 - 13	50				
AM 14	**060188**	–	14 - 15	50				
AM 16	**060189**	16	15 - 17	50				
AM 18	**060190**	–	18 - 19	50				
AM 20	**060191**	20	20 - 21	50				
AM 22	**060192**	–	22 - 23	50				
AM 24	**060193**	–	24 - 25	50				
AM 26	**060194**	25	26 - 27	50				
AM 28	**060195**	–	28 - 29	50				
AM 30	**060196**	–	30 - 31	50				
AM 32	**060209**	32	32 - 33	25				
AM 34	**060210**	–	34 - 35	25				
AM 37	**060211**	37	37 - 39	20				
AM 40	**090849**	40	40 - 42	15				
AM 50	**090850**	50	50 - 52	10				
AM 63	**090851**	63	63 - 65	10				

Conduit clip BSM

The flat metal clip for cables and pipes

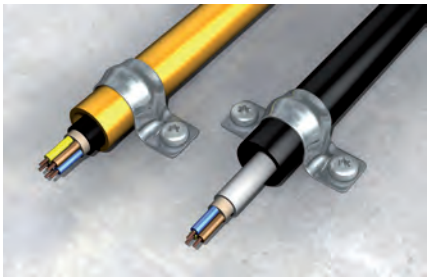

Fixing armoured conduits

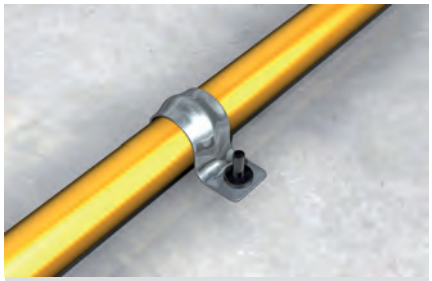

Fixing armoured conduits

BUILDING MATERIALS

When using impact nail ED:
- Concrete

ADVANTAGES

- The open conduit clip BSM is ideal for the post-installation fixing of conduits.
- The conduit clip allows for a direct fixing with impact nails and is, therefore, quick and easy to install.
- Two conduits or pipes can be fixed with just one fixing point with the twin clamp BSMZ.

APPLICATIONS

For fixing of:
- Electrical conduits
- Flexible and rigid plastic insulating pipes
- Steel conduits

FUNCTIONING

- Depending on your requirements, use a conduit clip with 1 or 2 fixing points, or a twin clamp.
- The conduits or pipes are laid in the conduit clip. Assembling the clip fixes the conduits / pipes.
- Our recommendation for fixtures on concrete (not older than 6 months): Impact nail.

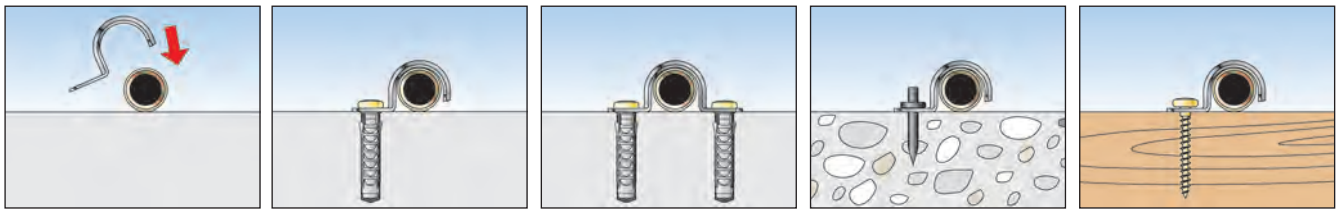

TECHNICAL DATA

Conduit clip **BSM**

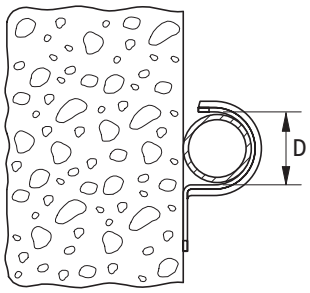

Conduit clip **BSMD**

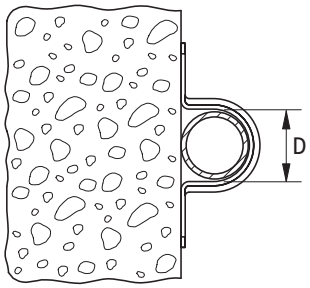

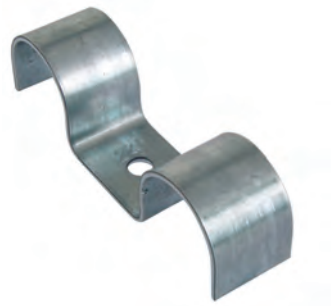

Conduit clip **BSMZ**

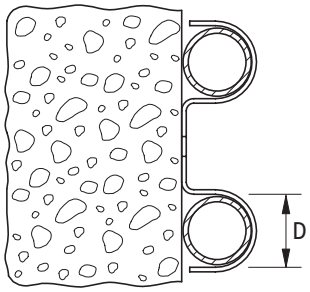

Item	Art.-No. BSM	BSMD	BSMZ	Dimension IEC	Clamping range D [mm]	Sales unit [pcs]	
6	**015014**	–	–	–	6	100	
8	**015015**	–	–	–	8	100	
10	**015016**	–	–	–	10	100	
10	–	**015068**	–	–	10	50	
12	**015017**	**015069**	–	–	12	50	
14	**015018**	**015070**	–	–	14	50	
15	**015093**	–	–	15	15	50	
16	**060149**	**060169**	–	16	16	50	
18	**060150**	**060170**	–	–	18	50	
20	**060151**	**060171**	**079535**	20	20	50	
22	**060152**	**060172**	–	–	22	50	
24	**060153**	–	**079536**	–	24	50	
25	**090839**	**090844**	–	25	25	50	
26	**096958**	**015076**	–	–	26	50	
28	–	**060175**	–	–	28	25	
28	**060155**	–	**079537**	–	28	50	
30	**015019**	–	–	–	30	50	
32	**090840**	–	–	32	32	50	
32	–	**090845**	–	32	32	25	
37	**060158**	**060178**	–	–	37	25	
40	**090841**	**090846**	–	40	40	25	
42	–	**015081**	–	–	42	20	
42	**015021**	–	–	–	42	25	
47	–	**015082**	–	–	47	20	
50	**090842**	–	–	50	50	20	
50	–	**090847**	–	50	50	15	
63	–	**090848**	–	63	63	10	
63	**090843**	–	–	63	63	15	

Fixing in concrete without pre-drilling

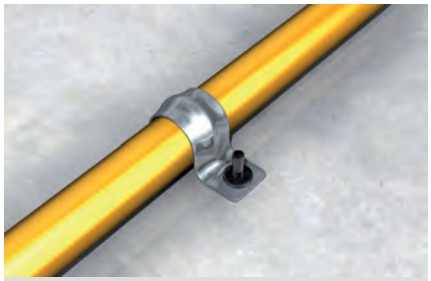

Fixing armoured conduits

Fixing perforated tapes

BUILDING MATERIALS

- Fresh concrete (not older than 6 months)

ADVANTAGES

- The stable impact nail ED can be set in concrete with the impact nail setting tool SZE without pre-drilling. This allows for a fast installation.
- The setting tool SZE impact protection provides the best protection for your hand, thus ensuring a safe installation.

APPLICATIONS

For fixing of:

- Conduit clips such as BSM, BSMD, BSMZ
- Perforated band such as LBK, LBV

FUNCTIONALITY

- The impact nail ED is set in the setting tool SZE.
- The bracket in the setting tool holds the nail securely in place during the installation procedure.
- Pre-positioning of the element to be fixed.
- The nail can be hammered through the fixing element directly into the concrete (not older than 6 months).

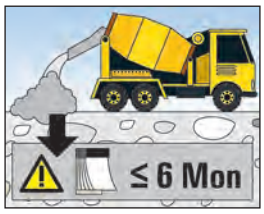

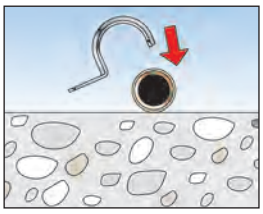

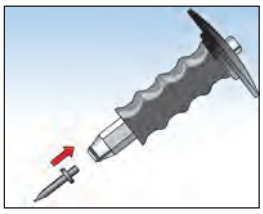

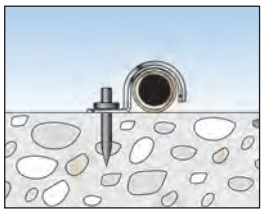

TECHNICAL DATA

Impact nail **ED**

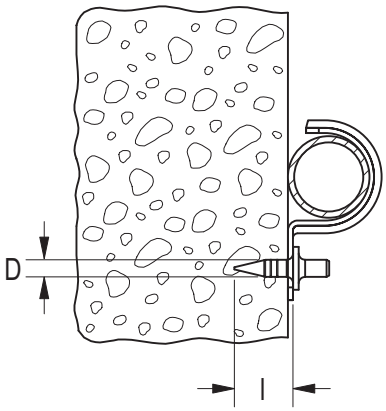

Item	Art.-No.	Length l [mm]	Diameter d [mm]	Sales unit [pcs]				
ED 15	**048212**	15	4.0	200				
ED 18	**079815**	18	4.0	200				
ED 22	**014570**	22	4.0	200				

TECHNICAL DATA

Impact nail setting tool **SZE**

Toolset for **SZE**

Item	Art.-No.	Sales unit [pcs]						
SZE	**079820**	1						
Toolset for SZE	**043365**	4						

Cable tie BN/UBN

For the simple bundling of cables and pipes

Cable fixing

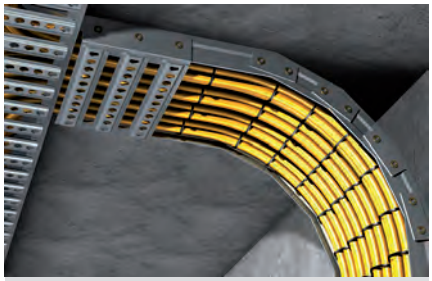

Bundling electric cables

CHARACTERISTICS

ADVANTAGES

- The long-lasting nylon material is halogen- and silicone-free.
- The cable tie UBN (black) is made from UV-stabilised material.

APPLICATIONS

For bundling of:

- Electric cables
- Flexible and rigid plastic insulating pipes
- Steel conduits

FUNCTIONING

- Lie the cable tie around the object to be fixed, and pull the band through the head of the cable tie. The cable tie can no longer be opened due to the latching of the tab in the teeth.
- Temperature resistance once installed from -10 °C to +85 °C.
- Recommended installation temperature from -10 °C to +85 °C.

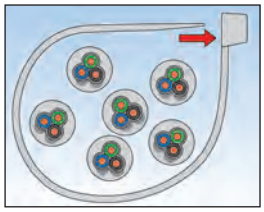

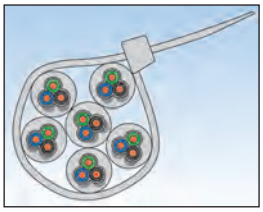

TECHNICAL DATA

Cable tie **BN**, colour: transparent

Cable tie **UBN**, colour: black

Cable tie **GBN**, colour: green

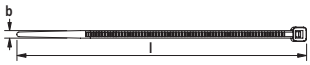

Item	Art.-No. Colour: black	Art.-No. Colour: transparent	Art.-No. Colour: green	Dimensions [mm]	Bundle diameter [mm]	Sales unit [pcs]	Outer carton [pcs]
BN/UBN/GBN 2,5 x 100	**087488**	**087478**	**543924**	2,5 x 100	max. 20	100	20000
BN/UBN 2,5 x 120	**087489**	**087479**	**–**	2,5 x 120	max. 27	100	15000
GBN 2,5 x 150	**–**	**–**	**543925**	2,5 x 150	max. 36	100	20000
BN/UBN/GBN 2,5 x 200	**087490**	**087480**	**543926**	2,5 x 200	max. 52	100	10000
BN/UBN 2,5 x 160	**069363**	**037489**	**–**	2,5 x 160	max. 39	100	20000
BN/UBN/GBN 3,6 x 150	**087491**	**087481**	**543927**	3,6 x 150	max. 36	100	10000
BN/UBN 3,6 x 200	**037573**	**019802**	**–**	3,6 x 200	max. 52	100	10000
BN/UBN 3,6 x 300	**069364**	**037490**	**–**	3,6 x 300	max. 84	100	7500
BN/UBN 4,6 x 160	**069365**	**037501**	**–**	4,6 x 160	max. 36	100	10000
BN/UBN 4,6 x 190	**069366**	**037581**	**–**	4,6 x 190	max. 46	100	10000
BN/UBN/GBN 4,6 x 200	**087494**	**087484**	**543928**	4,6 x 200	max. 49	100	7500
BN/UBN 4,8 x 250	**069367**	**–**	**–**	4,8 x 250	max. 65	100	5000
BN/UBN 4,8 x 250	**–**	**037582**	**–**	4,8 x 250	max. 65	100	5000
BN/UBN/GBN 4,8 x 280	**087495**	**087485**	**543929**	4,8 x 280	max. 74	100	5000
BN/UBN 4,8 x 350	**069368**	**037653**	**–**	4,8 x 350	max. 97	100	5000
BN/UBN 4,8 x 370	**069369**	**037583**	**–**	4,8 x 370	max. 103	100	5000
BN/UBN 4,8 x 430	**069370**	**037708**	**–**	4,8 x 430	max. 122	100	5000
BN/UBN 7,6 x 200	**069372**	**037945**	**–**	7,6 x 200	max. 50	100	4500
BN/UBN 7,8 x 300	**069373**	**037949**	**–**	7,6 x 300	max. 82	100	2500
BN/UBN 7,6 x 350	**087497**	**087487**	**–**	7,6 x 350	max. 98	100	2500
BN/UBN 7,6 x 450	**069374**	**037996**	**–**	7,6 x 450	max. 130	100	2500
BN/UBN 7,6 x 550	**069375**	**037997**	**–**	7,6 x 550	max. 162	100	2000
BN/UBN 8,8 x 760	**069376**	**037998**	**–**	8,8 x 760	max. 229	100	1000
BN/UBN 8,8 x 810	**069377**	**038000**	**–**	8,8 x 810	max. 245	100	1000
BN/UBN 8,8 x 1168	**069379**	**038002**	**–**	8,8 x 1168	max. 340	100	500

Infinitely variable fixing of wire suspensions

Suspension of signs

Suspensions for trade show exhibits

ADVANTAGES

- The simple system guarantees ease of use.
- The Wireclip's simple closing mechanism means that no tools are needed. This allows for a cost-effective installation.
- The reclosable Wireclips make it possible to adjust the length at any time. This guarantees the greatest flexibility.

APPLICATIONS

For suspension of:

- Lighting strips
- Cable trays
- Ventilation ducts
- Pipes
- Signs
- Chilled ceilings

FUNCTIONALITY

- Loops are formed from the wire, which can be threaded through the wireclip. This allows objects to be hung. The wireclips can be adjusted at any time.
- The FNA II 6x25 OE is suitable for fixing the wire.

Note:

- Do not apply paint or any other coating.
- Do not apply lubricant.
- Do not use for lifting loads.
- Remove damaged wire ends using the wire cutter WIZ prior to introducing wires into the wire clip.

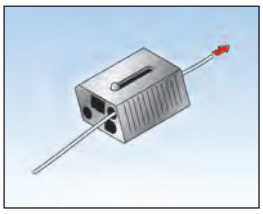
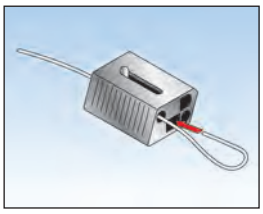
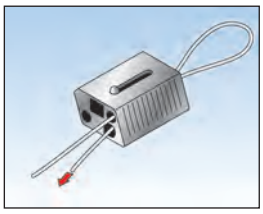
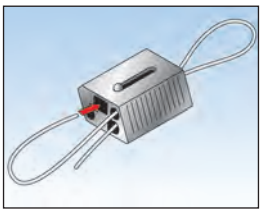
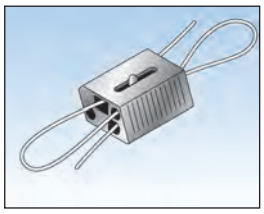

TECHNICAL DATA

WIC 2

WIC 3

WIC 4

Item	Art.-No.	Wire-Ø [mm]	Sales unit [pcs]					
WIC 2 VE20	**044559**	2 - 2,5	20					
WIC 3 VE20	**044561**	2,5 - 3,5	20					
WIC 2 VE100	**044560**	2 - 2,5	100					
WIC 4 VE50	**044564**	3 - 4	50					

TECHNICAL DATA

WIS cable set with eyelet

Wire cutter **WIZ**

Item	Art.-No.	Cable length [m]	Wire-Ø [mm]	Sales unit [pcs]				
WIS 2/1	**045956**	1	2	10				
WIS 2/2	**045957**	2	2	10				
WIS 2/3	**045958**	3	2	10				
WIS 2/5	**045959**	5	2	10				
WIS 2/10	**045960**	10	2	10				
WI Ø 2 mm	**044565** 1)	200	2	1				
WIZ	**044721**	–	–	1				

1) on a roll

LOADS

Wireclip

Highest recommended loads[1)] per Wireclip

Type	Diameter of wire cable [mm]	Recommended tensile load [kN]
WIS complete system	2,0	0,5
WIC 2[2)]	2,0	0,6
WIC 2[2)]	2,5	1,0
WIC 3[2)]	3,0	1,2
WIC 4[2)]	4,0	2,3

[1)] Required safety factors are considered.

[2)] Only in combination with fischer wire cable.

fischer
innovative solutions

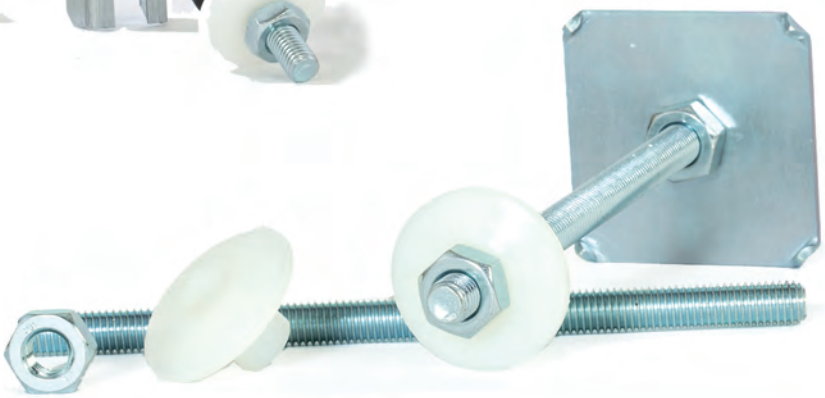

7 Sanitary fixings

		Page
Sanitary fixings for board materials		290
Ceramic fixings		292
Wash basin and urinal fixings		294

Complete fixing sets for wash basins and urinals in board building materials and plumbing walls

Urinals

Wash basins

BUILDING MATERIALS

- Gypsum plasterboard and gypsum fibreboards
- Chipboard

ADVANTAGES

- With their special geometries, KM and WDP are the specialists for fixings in plumbing and hollow walls.
- The wide transition beams of the KM and the large base plate of the WDP ensure a good load distribution, thus allowing for a high load-bearing capacity.

APPLICATIONS

- Wash basins
- Urinals

FUNCTIONING

- KM is suitable for push-through installation.
- When placed in the drill hole, the wide transition beam of the KM independently swings open behind the board.
- WDP is set into the plumbing walls during wall installation.

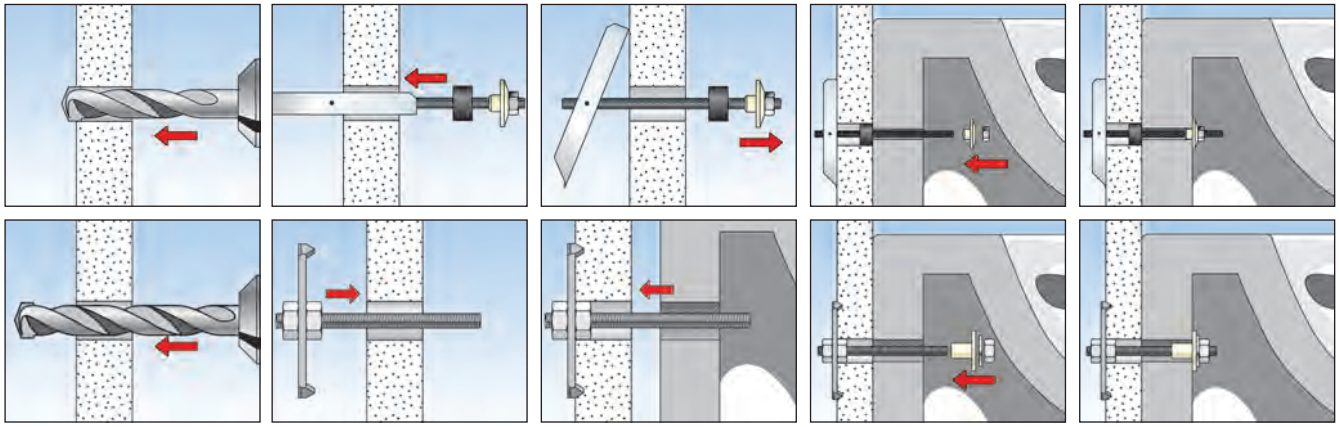

TECHNICAL DATA

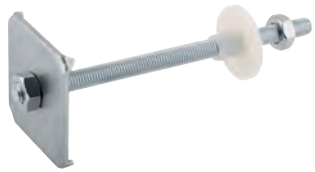

Wash basin and urinal fixing **WDP**

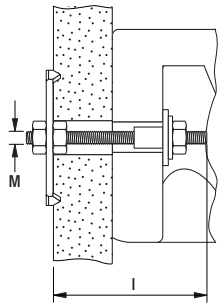

Item	Art.-No.	Contents per plastic bag [pcs]	Sales unit [pcs]
WDP 10 x 170	**014320**	2 Threaded rods M10 x 170 with base plate 60x60x3, 2 flanged bushes BDH M10, 2 hexagon nuts M10 zinc-plated	10

TECHNICAL DATA

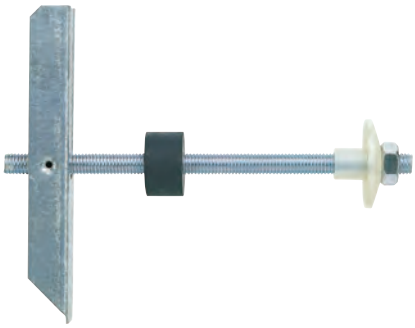

Gravity toggle **KM 10**

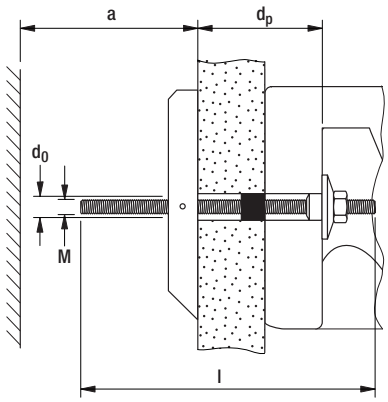

Item	Art.-No.	Drill hole diameter d_0 [mm]	Anchor length l [mm]	Min. cavity depth a [mm]	Max. panel thickness d_p [mm]	Screw d_s x l_s [mm]	Sales unit [pcs]
KM 10	**050326**	30	180	140	90	M 10 x 180	25

Complete fixing sets for free-standing toilets and bidets

Free-standing toilets

Bidets

BUILDING MATERIALS

- Concrete
- Solid sand-lime brick
- Natural stone with dense structure
- Solid brick made from lightweight concrete
- Solid brick

CHARACTERISTICS

ADVANTAGES

- Complete fixing sets including brass screws allow for quick and easy installation.
- A pronounced rim prevents contact between the screw and ceramics, thus ensuring nothing gets damaged during fixing.
- The WB5N's assembly bracket with pre-drilled rows of holes allows for a flexible fixing with two directions.
- The WCN is also suitable for fixing ceramic shelves and mirrors, and can thus be used for a wide range of applications.

APPLICATIONS

- Free-standing toilets
- Bidets
- Ceramic shelves
- Mirrors

FUNCTIONING

- S 8 RD is suitable for push-through installation.
- WCN and S 8 D are suitable for both pre-positioned and push-through installation.
- The WB5N's assembly bracket is flexibly positioned on the base using the long hole. The ceramics are then fixed to the bracket via the rows of holes. These counterbalance any height differences in the ceramic assembly holes.

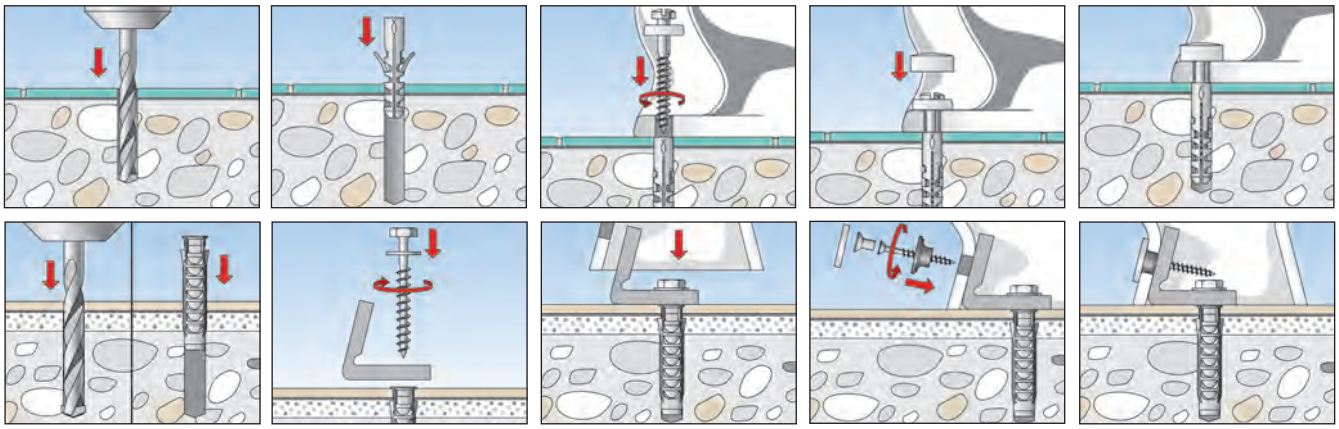

TECHNICAL DATA

WCN

Item	Art.-No.	Contents per plastic bag [pcs]	Sales unit [pcs]
WCN 1	**060561**	2 wall plugs S 8, 2 brass screws 6 x 70 hex., 2 cover caps white, 2 snap-fit sleeves	50
WCN 2	**060562**	2 wall plugs S 8, 2 brass screws 6 x 70 hex., 2 cover caps chrome, 2 snap-fit sleeves	50

TECHNICAL DATA

S 8 D 70 WCR

Item	Art.-No.	Contents per plastic bag [pcs]	Sales unit [pcs]
S 8 D 70 WCR	**060564**	2 wall plugs S 8, 2 brass screws 6 x 70 hex., 2 cover caps chrome and white, 2 snap-fit sleeves	50

TECHNICAL DATA

S 8 RD WCR

Item	Art.-No.	Contents per plastic bag [pcs]	Sales unit [pcs]
S 8 RD 60 WCR	**060570**	2 wall plugs S 8 RD 60, 2 brass screws 6 x 65 hex., 2 cover caps chrome and white	50
S 8 RD 80 WCR	**060568**	2 wall plugs S 8 RD 80, 2 brass screws 6 x 85 hex., 2 cover caps chrome and white	50

TECHNICAL DATA

WC fixing **WB 5N**

Item	Art.-No.	Contents	Sales unit [pcs]
WB 5N	**018652**	2 S plugs SX 10, 2 Screws 7x65 zinc-plated, 2 Nylon angles, 2 washers 8mm, 2 screws A2 stainless steel, 2 flanged sleeves, 2 cover caps chrom	50

Complete fixing sets for wash basins, urinals and sanitary installations

Urinals

Wash basins

BUILDING MATERIALS

- Concrete
- Vertically perforated brick
- Hollow blocks made from lightweight concrete
- Perforated sand-lime brick
- Solid sand-lime brick
- Natural stone
- Aerated concrete
- Solid panel made from gypsum
- Solid brick made from lightweight concrete
- Solid brick

CHARACTERISTICS

ADVANTAGES

- Complete fixing sets allow for quick and easy installation.
- The universal plug UX can be used in solid and hollow materials, thus offering a high level of flexibility.
- Flanged nuts and collar sleeves made of high-strength nylon are resistant to ageing and chemicals, and guarantee a long-lasting fixing that will not damage the ceramics.
- Cover caps with a high-quality chrome finish ensure the fixture remains visually attractive for a long period of time.

APPLICATIONS

- Wash basins
- Urinals
- Built-in toilets
- Boilers
- Gas heaters
- Cisterns
- Consoles

FUNCTIONING

- The rimless UX is suitable for pre-positioned and push-through installation.
- Screwing in the screw causes the UX to expand in solid and hollow building material.
- Maximum load-bearing capacity is only achieved when the minimum screw-in depth is reached.
- Tiles and plaster are not classed as load-bearing base materials.

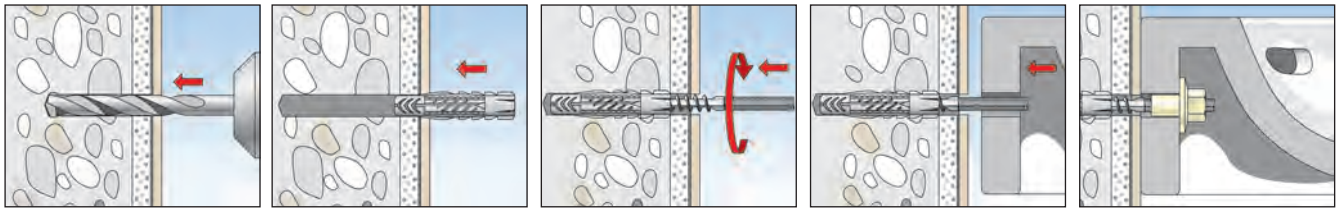

TECHNICAL DATA

Wash basin and urinal fixing **WD**

Item	Art.-No.	Contents per plastic bag [pcs]	Sales unit [pcs]
WD 8 x 90	**080659**	2 wall plugs UX 10 x 60, 2 stud screws M8 x 90 zinc-plated, 2 flanged nuts BU M8	50
WD 8 x 110	**080658**	2 wall plugs UX 10 x 60, 2 stud screws M8 x 110 zinc-plated, 2 flanged nuts BU M8	50
WD 10 x 120	**080655**	2 wall plugs UX 14 x 75, 2 stud screws M10 x 120 zinc-plated, 2 flanged nuts BU M10 MH	50
WD 10 x 140	**080656**	2 wall plugs UX 14 x 75, 2 stud screws M10 x 140 zinc-plated, 2 flanged nuts BU M10 MH	50

TECHNICAL DATA

Boiler fixing **BO**

Item	Art.-No.	Contents per plastic bag [pcs]	Sales unit [pcs]
BO 120	**080654**	4 wall plugs UX 14 x 75, 4 stud screws M10 x 120 zinc-plated, 4 flanged nuts BU M10	25

TECHNICAL DATA

Washbasin fixing **WST**

Item	Art.-No.	Contents per plastic bag [pcs]	Sales unit [pcs]
WST 10 x 140	**080660**	2 wall plugs UX 14 x 75, 2 stud screws M10 x 140 zinc-plated, 2 hexagon nuts M10 zinc-plated, 2 flanged bushes BDH M10	50
WST 12 x 150	**080661**	2 wall plugs UX 14 x 75, 2 stud screws M12 x 150 zinc-plated, 2 hexagon nuts M12 zinc-plated, 2 flanged bushes BDH M12	50
WST 12 x 180	**080662**	2 wall plugs UX 14 x 75, 2 stud screws M12 x 180 zinc-plated, 2 hexagon nuts M12 zinc-plated, 2 flanged bushes BDH M12	50

TECHNICAL DATA

Urinal fixing **UST 8 x 110**

Urinal fixing **UST 10 x 120**

Item	Art.-No.	Contents per plastic bag [pcs]	Sales unit [pcs]
UST 8 x 110	**083578**	2 wall plugs UX 10 x 60, 2 stud screws M8 x 110, 2 washers B 8.4 DIN 125, 2 plastic washer 8,4 x 16 x 1,6, 2 cap nuts FA 8, 2 cover caps chrome plated	50
UST 10 x 120	**080668**	2 wall plugs UX 14 x 75, 2 stud screws M10 x 120, 2 flanged nuts BU M10, 2 cover caps AKM 10 CR	10

TECHNICAL DATA

Sanitary fixing **WL**

Item	Art.-No.	Contents per plastic bag [pcs]	Sales unit [pcs]
WL 7 x 60	**080651**	2 plugs S 10, 2 screws 7 x 65 hex. head zinc-plated, 2 washers zinc-plated	100
WL 8 x 70	**080652**	2 plugs S 10, 2 screws 8 x 70 hex. DIN 571 zinc-plated, 2 washers zinc-plated	100
WL 10 x 80	**080650**	2 plugs S 12, 2 screws 10 x 80 hex. DIN 571 zinc-plated, 2 washers zinc-plated	50

ACCESSORIES

Flanged nut **BUM**

Item	Art.-No.	Thread M	Width across nut ⬡ SW [mm]	Washer [mm]	Match	Sales unit [pcs]
BU M8 MH	**060200**	M 8	17	40	STS M8	25
BU M10 MH	**060201**	M 10	17	40	STS M10	25
BU M12 MH	**060204**	M 12	19	40	STS M12	25

ACCESSORIES

Cover cap **AKM**

Item	Art.-No.	Colour	Match	Sales unit [pcs]
AKM 10 W	**080972**	white	BU M10 MH	20
AKM 10 CR	**080951**	chrome	BU M10 MH	100
AKM 12 CR	**080952**	chrome	BU M12 MH	100

ACCESSORIES

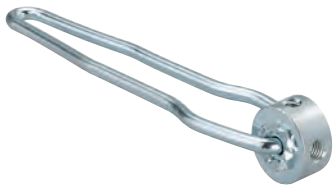

Installation tool **HED**

Item	Art.-No.	Match	Sales unit [pcs]
HED	**079831**	M6, M8, M10, M12	1

INSTALLATION DATA

Item	Art.-No.	Drill diameter d_0 [mm]	Min. drill hole depth h_1 [mm]	Usable length (with assembled flanged nut) t_{fix} [mm]	Min. bolt penetration $l_{E,min}$ [mm]
WD 8 x 90	**080659**	10	75	5	68
WD 8 x 110	**080658**	10	75	25	68
WD 10 x 120	**080655**	14	95	18	85
WD 10 x 140	**080656**	14	95	38	85
BO 120	**080654**	14	95	18	85
WST 10 x 140	**080660**	14	95	38	85
WST 12 x 150	**080661**	14	95	48	85
WST 12 x 180	**080662**	14	95	78	85
UST 8 x 110	**083578**	10	75	32	68
UST 10 x 120	**080668**	14	95	18	85
WL 7 x 60	**080651**	10	70	10	57
WL 8 x 70	**080652**	10	70	12	58
WL 10 x 80	**080650**	12	80	10	70

LOADS

Washbasin and urinal fixings

Highest recommended loads[1] for a single anchor.

The given loads are valid for stud screws with the specified diameter.

Type			WD 8x90 WD 8x110	WD 10x120 WD 10x140	WST 10x140 BO 120	WST 12x150 WST 12x180	UST 8x110	UST 10x120	WL 7x60	WL 8x70	WL 10x80
Screw diameter	Ø	[mm]	8	10	10	12	8	10	7	8	10
Recommended loads in the respective base material F_{rec}[2]											
Concrete	≥ C20/25	[kN]	0,90	0,90	0,90	1,80	0,90	0,90	1,10	1,10	1,50
Solid brick	≥ Mz 12	[kN]	0,50	0,50	0,50	0,80	0,50	0,50	-[3]	-[3]	-[3]
Perforated sand-lime brick	≥ KSL 12	[kN]	0,40	0,40	0,40	0,80	0,40	0,40	-	-	-
Vertically perforated brick	≥ Hlz 12	[kN]	0,20	0,30	0,30	0,40	0,20	0,30	-	-	-
Aerated concrete	≥ PB 4, PP 4 (G4)	[kN]	0,30	0,30	0,30	0,70	0,30	0,30	0,16	0,16	0,28

[1] Required safety factors are considered.

[2] Valid for tensile load, shear load and oblique load under any angle.

[3] Due to that the failure of the substrate varies too much no reproducible values can be given.

fischer
innovative solutions

8 Plugs and anchors

	Page
HIGH PERFORMANCE STEEL ANCHORS	
Bolt anchor FAZ II	303
ZYKON undercut anchor FZA	306
ZYKON hammerset anchor FZEA II	307
Concrete screw ULTRACUT FBS II	307
Hammerset anchor EA II	313
Nail anchor FNA II	315
Ceiling nail FDN II	316
Aircrete anchor FPX-I	317
CHEMICAL FIXINGS	
Highbond-System FHB II	318
Superbond-System FSB	321
Injection mortar FIS V	322
Injection mortar FIS VL	325

	Page
PLASTIC FIXINGS	
Frame fixing SXR	326
Frame fixing SXRL	327
Stand-off installation Thermax	328
DUOPOWER	330
Universal plug UX	331
Expansion plug SX	332
FOAMS AND SEALANTS	
Gun Foam Premium PUP 750	333
2-component premium rapid foam 2K PU 400 PLUS	333
Rapid installation foam Premium PU 500/750	333
Premium sanitary silicone DSSA	334
Premium construction silicone DBSA	334
Construction sealant Premium DKM	334
Premium all-weather sealant DDK	335
Flexible power adhesive premium HTM	335
Zinc spray FTC-ZS	335
Accessories	336

Overview of anchors and their approvals or suitability for sprinkler installations

Typ	ETA Concrete single	ETA Beton Concrete multiple	ETA Masonry	VdS approved	FM approved
FAZ II	Option 1			✓	✓
ULTRACUT FBS II	Option 1	✓ (FBS 6)		✓ (incl. FBS 6)	
FZA	Option 1			✓	✓
FHB II	Option 1				
FZEA II	Option 1			✓	✓
EA II	Option 7	✓		✓	✓
FIS V/VS/VW	Option 1		✓		
FIS SB	Option 1				
FIS V	Option 1		✓		
FNA II		✓		✓	
FPX-I			✓ Aerated concrete	✓ Aerated concrete	
FDN II		✓			
SXR / SXRL		✓	✓		

Legend:
ETA concrete option 1, single fixing = suitable for cracked and non-cracked concrete
ETA concrete option 7, single fixing = suitable for non-cracked concrete
ETA concrete for multiple fixing = suitable for cracked and non-cracked concrete

Anchor recommendation for fixing of Installation Systems products

Installation Systems products for push-through	Plugs recommendation for concrete substrate	Plugs recommendation for masonry substrate
FCA **FUS** **VB** 	FAZ II ULTRACUT FBS II 	SXRL FIS V with threaded rod or internal threaded socket as an alternative for pre positional installation.
FLS **GPL** 	ULTRACUT FBS II 6 FDN II FNA II 	SXRL As an alternative for pre-positioned installation!

Push-through installation:
Drilling of the hole as well as the installation of the anchor takes place through the baseplate of the cantilever arm, the channel or saddle flange, ...

Note: The combination of Installation Systems products and anchors is variable.

Anchor recommendation for fixing of Installation Systems products

Installation Systems products push-through installation	Plugs recommendation for concrete substrate	Plugs recommendation for masonry substrate	
G/GS	EA II	FPX-I for aerated concrete	UX
	FZEA II	FIS V with threaded rod or internal threaded socket as an alternative for pre positional installation.	SX
Pipe clamp	ULTRACUT FBS II 6		DUOPOWER
	FGD		

Pre positioned installation:
Drilling and anchor installation is done before installing (if required by screwing in) of the accessory like threaded rod or pipe clamps, ...

For further details as loads and dimensions please see the following pages or **www.fischer.com**

Note: The combination of Installation Systems products and anchors is variable.

Bolt anchor FAZ II
For highest demands. Powerful and flexible.

TECHNICAL DATA

Bolt anchor **FAZ II**

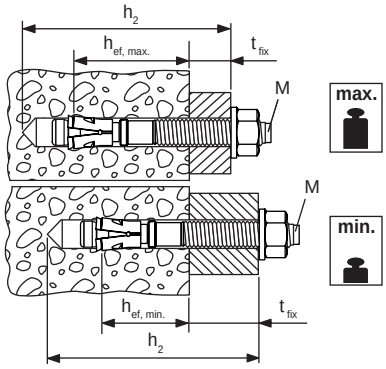

	Zinc-plated steel	Stainless steel	Highly corrosion resistant steel	Approval		Seismic-Approval	Drill hole diameter	Min. drill hole depth for through fixings	Anchor length	Max. usable length hef,max./ hef,min.	Thread	Width across nut	Sales unit
	Art.-No.	Art.-No.	Art.-No.	ETA	ICC		d_0 [mm]	h_2 [mm]	l [mm]	t_{fix} [mm]	Ø x length [mm]	⬡ SW [mm]	[pcs]
Item	gvz	A4	C										
FAZ II 6/10	542621	542623	–	■	–	–	6	60	65	10/-	M 6 x 25	10	50
FAZ II 6/20	542622	542624	–	■	–	–	6	70	75	20/-	M 6 x 35	10	50
FAZ II 8/10	094871 1)	501396 1)	–	■	▲	C1	8	65	75	10/20	M 8 x 38	13	50
FAZ II 8/10	–	–	501428 1)	■	▲	C1	8	65	75	10/20	M 8 x 38	13	10
FAZ II 8/30	094877 1)	501399 1)	–	■	▲	C1	8	85	95	30/40	M 8 x 58	13	50
FAZ II 8/30	–	–	501429 1)	■	▲	C1	8	85	95	30/40	M 8 x 58	13	10
FAZ II 8/50	094878 1)	501401	–	■	▲	C1	8	105	115	50/60	M 8 x 78	13	50
FAZ II 8/100	094879 1)	–	–	■	▲	C1	8	155	165	100/110	M 8 x 128	13	25
FAZ II 8/160	503251 1)	–	–	■	▲	C1	8	215	225	160/170	M 8 x 100	13	20
FAZ II 10/10	094981	501403	–	■	▲	C1 / C2	10	85	95	10/30	M 10 x 53	17	50
FAZ II 10/10	–	–	501430	■	▲	C1	10	85	95	10/30	M 10 x 53	17	10
FAZ II 10/20	094982	–	–	■	▲	C1 / C2	10	95	105	20/40	M 10 x 63	17	25
FAZ II 10/20	–	501406	–	■	▲	C1 / C2	10	95	105	20/40	M 10 x 63	17	50
FAZ II 10/30	094983	–	–	■	▲	C1 / C2	10	105	115	30/50	M 10 x 73	17	25
FAZ II 10/30	–	501407	–	■	▲	C1 / C2	10	105	115	30/50	M 10 x 73	17	50
FAZ II 10/30	–	–	503185	■	▲	C1	10	105	115	30/50	M 10 x 73	17	10
FAZ II 10/50	094984	501409	–	■	▲	C1 / C2	10	125	135	50/70	M 10 x 93	17	20
FAZ II 10/70	–	501410	–	■	▲	C1 / C2	10	145	155	70/90	M 10 x 113	17	20
FAZ II 10/80	094985	–	–	■	▲	C1 / C2	10	155	165	80/100	M 10 x 123	17	20
FAZ II 10/100	–	501411	–	■	▲	C1 / C2	10	175	185	100/120	M 10 x 100	17	20
FAZ II 10/100	094986	–	–	■	▲	C1 / C2	10	175	185	100/120	M 10 x 143	17	20
FAZ II 10/160	–	501412	–	■	▲	–	10	235	245	160/180	M 10 x 100	17	20
FAZ II 10/160	503252	–	–	■	▲	–	10	235	245	160/180	M 10 x 193	17	20
FAZ II 12/10	095419	501413	–	■	▲	C1 / C2	12	100	110	10/30	M 12 x 61	19	20
FAZ II 12/10	–	–	503186	■	▲	C1	12	100	110	10/30	M 12 x 61	19	10
FAZ II 12/20	095420	501415	–	■	▲	C1 / C2	12	110	120	20/40	M 12 x 71	19	20
FAZ II 12/30	095421	501416	–	■	▲	C1 / C2	12	120	130	30/50	M 12 x 81	19	20
FAZ II 12/30	–	–	501431	■	▲	C1	12	120	130	30/50	M 12 x 81	19	10
FAZ II 12/50	095446	501419	–	■	▲	C1 / C2	12	140	150	50/70	M 12 x 101	19	20
FAZ II 12/60	–	501420	–	■	▲	C1 / C2	12	150	160	60/80	M 12 x 111	19	20
FAZ II 12/80	095454	–	–	■	▲	C1 / C2	12	170	180	80/100	M 12 x 131	19	20
FAZ II 12/100	095470	501421	–	■	▲	C1 / C2	12	190	200	100/120	M 12 x 151	19	20
FAZ II 12/160	503253	–	–	■	▲	–	12	250	260	160/180	M 12 x 186	19	10
FAZ II 12/160	–	503180	–	■	▲	–	12	250	260	160/180	M 12 x 100	19	20
FAZ II 12/200	095605	–	–	■	▲	–	12	290	300	200/220	M 12 x 186	19	10
FAZ II 16/5	522124	–	–	■	▲	C1 / C2	16	115	128	5/25	M 16 x 64	24	10
FAZ II 16/5	–	522125	–	■	▲	C1 / C2	16	115	128	5/25	M 16 x 64	24	20

1) With minimum embedment depth only for statically interdeterminate systems

Approval Seismic C1/C2 only with maximum embedment depth

TECHNICAL DATA

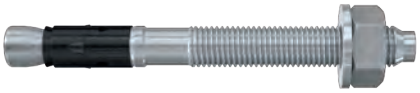

Bolt anchor **FAZ II**

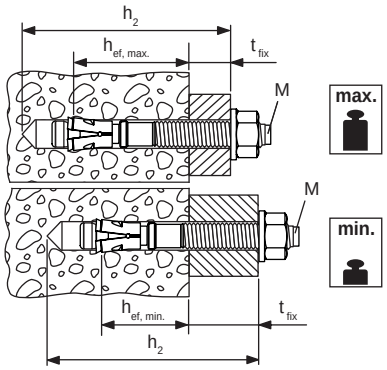

	Zinc-plated steel	Stainless steel	Highly corrosion resistant steel	Approval		Seismic-Approval	Drill hole diameter	Min. drill hole depth for through fixings	Anchor length	Max. usable length hef,max./ hef,min.	Thread	Width across nut	Sales unit
	Art.-No.	Art.-No.	Art.-No.	ETA	ICC		d_0 [mm]	h_2 [mm]	l [mm]	t_{fix} [mm]	Ø x length [mm]	⬡ SW [mm]	[pcs]
Item	gvz	A4	C										
FAZ II 16/25	–	501423	–	■	▲	C1 / C2	16	135	148	25/45	M 16 x 84	24	20
FAZ II 16/25	–	–	501432	■	▲	C1	16	135	148	25/45	M 16 x 84	24	10
FAZ II 16/25	095836	–	–	■	▲	C1 / C2	16	135	148	25/45	M 16 x 84	24	10
FAZ II 16/50	095864	–	–	■	▲	C1 / C2	16	160	173	50/70	M 16 x 109	24	10
FAZ II 16/50	–	–	503187	■	▲	C1	16	160	173	50/70	M 16 x 109	24	10
FAZ II 16/50	–	501424	–	■	▲	C1 / C2	16	160	173	50/70	M 16 x 109	24	20
FAZ II 16/100	095865	501425	–	■	▲	C1 / C2	16	210	223	100/120	M 16 x 159	24	10
FAZ II 16/160	503254	–	–	■	▲	C1 / C2	16	270	283	160/180	M 16 x 189	24	10
FAZ II 16/200	095967	–	–	■	▲	–	16	310	323	200/220	M 16 x 189	24	10
FAZ II 16/250	095968	–	–	■	▲	–	16	360	373	250/270	M 16 x 100	24	10
FAZ II 16/300	096188	–	–	■	▲	–	16	410	423	300/320	M 16 x 100	24	10
FAZ II 20/30	046632	–	–	■	▲	C1 / C2	20	155	172	30/-	M 20 x 54	30	5
FAZ II 20/30	–	501426	–	■	▲	C1 / C2	20	155	172	30/-	M 20 x 54	30	4
FAZ II 20/60	046633	–	–	■	▲	C1 / C2	20	185	202	60/-	M 20 x 84	30	5
FAZ II 20/60	–	503183	–	■	▲	C1 / C2	20	185	202	60/-	M 20 x 84	30	4
FAZ II 20/160	503255	–	–	■	▲	C1 / C2	20	285	302	160/-	M 20 x 100	30	5
FAZ II 24/30	046635	–	–	■	▲	C1	24	185	205	30/-	M 24 x 58	36	5
FAZ II 24/30	–	501427	–	■	▲	C1	24	185	205	30/-	M 24 x 58	36	4
FAZ II 24/60	046636	–	–	■	▲	C1	24	215	235	60/-	M 24 x 88	36	5
FAZ II 24/60	–	503184	–	■	▲	C1	24	215	235	60/-	M 24 x 88	36	4

1) With minimum embedment depth only for statically interdeterminate systems

Approval Seismic C1/C2 only with maximum embedment depth

Bolt anchor FAZ II K
For highest demands. Short and practible.

TECHNICAL DATA

Bolt anchor **FAZ II K**

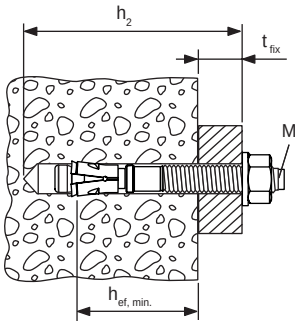

	Zinc-plated steel	Stainless steel	Approval	Drill hole diameter	Min. drill hole depth for through fixings	Anchor length	Usable length (hef min.)	Thread	Washer (outer diameter x thickness)	Sales unit
	Art.-No.	Art.-No.	ETA	d_0 [mm]	h_2 [mm]	l [mm]	t_{fix} [mm]	Ø x length [mm]	[mm]	[pcs]
Item	gvz	A4								
FAZ II 8/5 K	**538989**	**538990**	■	8	45	60	5	M 8 x 23	16 x 1,6	50
FAZ II 10/10 K	**522108**	**522116**	■	10	65	75	10	M 10 x 33	20 x 2	50
FAZ II 10/20 K	**522110**	–	■	10	75	85	20	M 10 x 43	20 x 2	25
FAZ II 10/20 K	–	**522117**	■	10	75	85	20	M 10 x 43	20 x 2	50
FAZ II 12/10 K	**522118**	**522122**	■	12	80	90	10	M 12 x 41	24 x 2,5	20
FAZ II 12/20 K	**522119**	**522123**	■	12	90	100	20	M 12 x 51	24 x 2,5	20
FAZ II 10/10 K GS	**522115**	–	■	10	65	75	10	M 10 x 33	25 x 3	50
FAZ II 12/10 K GS	**522121**	–	■	12	80	90	10	M 12 x 41	30 x 3	20

ACCESSORIES

fischer Anchor bolt setting tool **FABS**

Item	Art.-No.	Matching anchor type	Sales unit [pcs]
FABS	**077937**	FAZ II, FBZ, FBN II for diameter from M8 - M12	1

ZYKON undercut anchor FZA
The fixing system with the highest safety in cracked concrete

TECHNICAL DATA

ZYKON Bolt anchor **FZA**

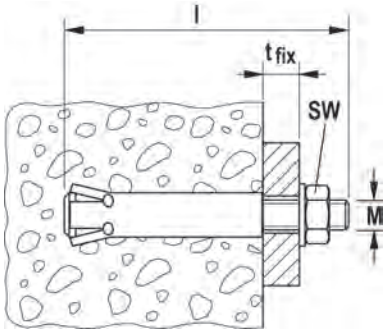

	Zinc-plated steel Art.-No.	Stainless steel Art.-No.	Approval ETA	Seismic-Approval	Required drill bit FZUB	Required setting tool FZE plus	Bolt length l [mm]	Max. fixture thickness t_{fix} [mm]	Thread M	Width across nut ⬡SW [mm]	Sales unit [pcs]
Item	gvz	A4									
FZA 10 x 40 M6/10	**060712**	**060772**	■	–	10 x 40	FZE 10 plus	60	10	M 6	10	25
FZA 12 x 40 M 8/15	**060715**	**060775**	■	–	12 x 40	FZE 12 plus	69	15	M 8	13	25
FZA 12 x 50 M 8/15	**060716**	**060776**	■	–	12 x 50	FZE 12 plus	79	15	M 8	13	20
FZA 12 x 50 M 8/50	**–**	**060774**	■	–	12 x 50	FZE 12 plus	114	50	M 8	13	20
FZA 14 x 40 M10/25	**060718**	**–**	■	C1	14 x 40	FZE 14 plus	79	25	M 10	17	25
FZA 14 x 40 M10/25	**–**	**060778**	■	C1	14 x 40	FZE 14 plus	79	25	M 10	17	20
FZA 14 x 60 M10/25	**060719**	**060779**	■	C1	14 x 60	FZE 14 plus	102	25	M 10	17	10
FZA 14 x 60 M10/50	**–**	**060766**	■	C1	14 x 60	FZE 14 plus	126	50	M 10	17	10
FZA 18 x 80 M12/25	**060721**	**060781**	■	C1	18 x 80	FZE 18 plus	126	25	M 12	19	10
FZA 18 x 80 M12/55	**–**	**060767**	■	C1	18 x 80	FZE 18 plus	156	55	M 12	19	10
FZA 22 x 100 M16/60	**060724**	**060782**	■	C1	22 x 100	FZE 22 plus	184	60	M 16	24	10
FZA 22 x 125 M16/60	**060725**	**060768**	■	C1	22 x 125	FZE 22 plus	209	60	M 16	24	6

TECHNICAL DATA

ZYKON Through anchor **FZA-D**

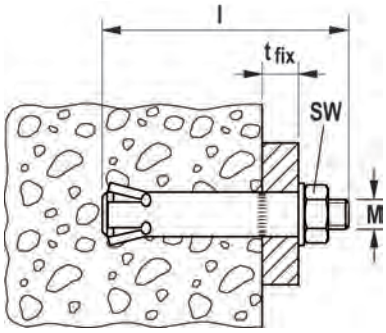

	Zinc-plated steel Art.-No.	Stainless steel Art.-No.	Approval ETA	Seismic-Approval	Required drill bit FZUB	Required setting tool FZE plus	Bolt length l [mm]	Max. fixture thickness t_{fix} [mm]	Thread M	Width across nut ⬡SW [mm]	Sales unit [pcs]
Item	gvz	A4									
FZA 12 x 50 M 8 D/10	**060652**	**060664**	■	–	12 x 50	FZE 12 plus	69	10	M 8	13	25
FZA 12 x 60 M 8 D/10	**060653**	**060665**	■	–	12 x 60	FZE 12 plus	79	10	M 8	13	25
FZA 12 x 80 M 8 D/30	**060654**	**060666**	■	–	12 x 80	FZE 12 plus	99	30	M 8	13	25
FZA 14 x 80 M10 D/20	**060657**	**060669**	■	C1	14 x 80	FZE 14 plus	102	20	M 10	17	10
FZA 14 x 100 M 8 D/30	**060658**	**060670**	■	C1	14 x 100	FZE 14 plus	126	40	M 10	17	10
FZA 18 x 100 M12 D/20	**060684**	**060672**	■	C1	18 x 100	FZE 18 plus	126	20	M 12	19	10
FZA 18 x 130 M12 D/50	**060685**	**060673**	■	C1	18 x 130	FZE 18 plus	156	50	M 12	19	10
FZA 22 x 125 M16 D/25	**060663**	**060675**	■	C1	22 x 125	FZE 22 plus	156	25	M 16	24	10

ZYKON hammerset anchor FZEA II
The internally threaded anchor with low anchoring depth for individual fixings in cracked concrete

TECHNICAL DATA

Zykon-Hammerset anchor **FZEA II**

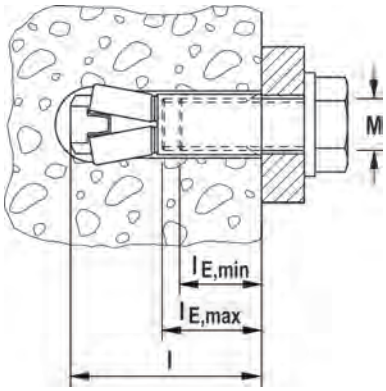

	Zinc-plated steel Art.-No.	Stainless steel Art.-No.	Highly corrosion resistant steel Art.-No.	Approval ETA	Required drill bit FZUB	Required setting tool FZED plus	Length l [mm]	Internal thread A1	Max. bolt penetration $l_{E,max}$ [mm]	Min. bolt penetration $l_{E,min}$ [mm]	Sales unit [pcs]
Item	gvz	A4	C								
FZEA II 10 x 40 M 8	**047303**	**047306**	**047309** 1)	■	10 x 40	FZED 10 plus	43	M 8	17	11	100
FZEA II 12 x 40 M10	**047304**	**047307**	**047310** 1)	■	12 x 40	FZED 12 plus	43	M 10	19	13	100
FZEA II 14 x 40 M12	**047305**	**047308**	—	■	14 x 40	FZED 14 plus	43	M 12	21	15	50

1) Delivery on request.

Concrete screw ULTRACUT FBS II
The high-performance concrete screw for absolute installation ease

TECHNICAL DATA

ULTRACUT FBS II US - hexagon head with integral washer

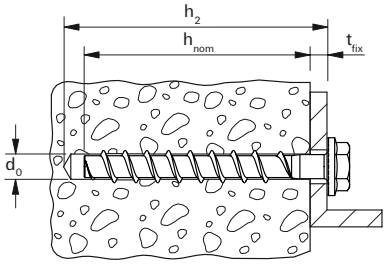

	Art.-No.	Approval ETA	Drill hole diameter d_0 [mm]	Min. drill hole depth for through fixings h_2 [mm]	Screw d_a x l_s [mm]	Screw-in depth with fixture thickness h_{nom1} / t_{fix} [mm]	Screw-in depth with fixture thickness h_{nom2} / t_{fix} [mm]	Screw-in depth with fixture thickness h_{nom3} / t_{fix} [mm]	Drive	Sales unit [pcs]
Item	gvz									
FBS II 8x55 5/- US TX	**536851**	■	8	65	10 x 55	50 / 5	- / -	- / -	TX40/SW13	50
FBS II 8x70 20/5 US TX	**536852**	■	8	80	10 x 70	50 / 20	- / -	65 / 5	TX40/SW13	50
FBS II 8x80 30/15 US TX	**536853**	■	8	90	10 x 80	50 / 30	- / -	65 / 15	TX40/SW13	50
FBS II 8x90 40/25 US TX	**536854**	■	8	100	10 x 90	50 / 40	- / -	65 / 25	TX40/SW13	50
FBS II 8x100 50/35 US TX	**536855**	■	8	110	10 x 100	50 / 50	- / -	65 / 35	TX40/SW13	50
FBS II 8x110 60/45 US TX	**536856**	■	8	120	10 x 110	50 / 60	- / -	65 / 45	TX40/SW13	50
FBS II 8x130 80/65 US TX	**536857**	■	8	140	10 x 130	50 / 80	- / -	65 / 65	TX40/SW13	50
FBS II 10x60 5/-/- US	**536858**	■	10	70	12 x 60	55 / 5	- / -	- / -	SW 15	50
FBS II 10x70 15/5/- US	**536859**	■	10	80	12 x 70	55 / 15	65 / 5	- / -	SW 15	50
FBS II 10x80 25/15/- US	**536860**	■	10	90	12 x 80	55 / 25	65 / 15	- / -	SW 15	50

TECHNICAL DATA

ULTRACUT FBS II US - hexagon head with integral washer

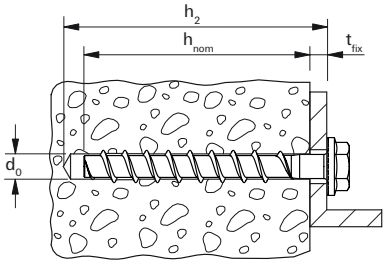

Item	Art.-No. gvz	Approval ETA	Drill hole diameter d_0 [mm]	Min. drill hole depth for through fixings h_2 [mm]	Screw $d_a \times l_s$ [mm]	Screw-in depth with fixture thickness h_{nom1} / t_{fix} [mm]	Screw-in depth with fixture thickness h_{nom2} / t_{fix} [mm]	Screw-in depth with fixture thickness h_{nom3} / t_{fix} [mm]	Drive	Sales unit [pcs]
FBS II 10x90 35/25/5 US	**536861**	■	10	100	12 x 90	55 / 35	65 / 25	85 / 5	SW 15	50
FBS II 10x100 45/35/15 US	**536862**	■	10	110	12 x 100	55 / 45	65 / 35	85 / 15	SW 15	50
FBS II 10x120 65/55/35 US	**536863**	■	10	130	12 x 120	55 / 65	65 / 55	85 / 35	SW 15	50
FBS II 10x140 85/75/55 US	**536864**	■	10	150	12 x 140	55 / 85	65 / 75	85 / 55	SW 15	50
FBS II 10x160 105/95/75 US	**536865**	■	10	170	12 x 160	55 / 105	65 / 95	85 / 75	SW 15	50
FBS II 10x200 145/135/115 US	**536866**	■	10	210	12 x 200	55 / 145	65 / 135	85 / 115	SW 15	20
FBS II 10x230 175/165/145 US	**536867**	■	10	240	12 x 230	55 / 175	65 / 165	85 / 145	SW 15	20
FBS II 10x260 205/195/175 US	**536868**	■	10	270	12 x 260	55 / 205	65 / 195	85 / 175	SW 15	20
FBS II 12x70 10/-/- US	**536869**	■	12	80	14 x 70	60 / 10	- / -	- / -	SW 17	20
FBS II 12x85 25/10/- US	**536870**	■	12	95	14 x 85	60 / 25	75 / 10	- / -	SW 17	20
FBS II 12x110 50/35/10 US	**536871**	■	12	120	14 x 110	60 / 50	75 / 35	100 / 10	SW 17	20
FBS II 12x130 70/55/30 US	**536872**	■	12	140	14 x 130	60 / 70	75 / 55	100 / 30	SW 17	20
FBS II 12x150 90/75/50 US	**536873**	■	12	160	14 x 150	60 / 90	75 / 75	100 / 50	SW 17	20
FBS II 14x75 10/-/- US	**536874**	■	14	90	16 x 75	65 / 10	- / -	- / -	SW 21	20
FBS II 14x95 30/10/- US	**536875**	■	14	110	16 x 95	65 / 30	85 / 10	- / -	SW 21	20
FBS II 14x100 35/15/- US	**536876**	■	14	115	16 x 100	65 / 35	85 / 15	- / -	SW 21	20
FBS II 14x125 60/40/10 US	**536877**	■	14	140	16 x 125	65 / 60	85 / 40	115 / 10	SW 21	10
FBS II 14x150 85/65/35 US	**536878**	■	14	165	16 x 150	65 / 85	85 / 65	115 / 35	SW 21	10

TECHNICAL DATA

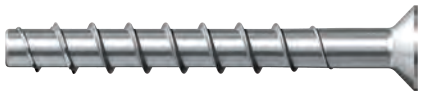

ULTRACUT FBS II SK - countersunk head

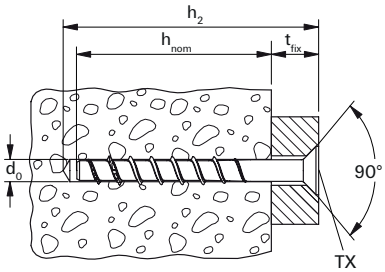

Item	Art.-No. gvz	Approval ETA	Drill hole diameter d_0 [mm]	Min. drill hole depth for through fixings h_2 [mm]	Screw $d_a \times l_s$ [mm]	Screw-in depth with fixture thickness h_{nom1} / t_{fix} [mm]	Screw-in depth with fixture thickness h_{nom2} / t_{fix} [mm]	Screw-in depth with fixture thickness h_{nom3} / t_{fix} [mm]	Drive	Sales unit [pcs]
FBS II 8x60 10/- SK	**536880**	■	8	70	10 x 60	50 / 10	- / -	- / -	TX40	50
FBS II 8x80 30/15 SK	**536881**	■	8	90	10 x 80	50 / 30	- / -	65 / 15	TX40	50
FBS II 8x90 40/25 SK	**536882**	■	8	100	10 x 90	50 / 40	- / -	65 / 25	TX40	50
FBS II 10x65 10/-/- SK	**536884**	■	10	75	12 x 65	55 / 10	- / -	- / -	TX50	50
FBS II 10x80 25/15/- SK	**536885**	■	10	90	12 x 80	55 / 25	65 / 15	- / -	TX50	50
FBS II 10x95 40/30/10 SK	**536886**	■	10	105	12 x 95	55 / 40	65 / 30	85 / 10	TX50	50
FBS II 10x100 45/35/15 SK	**536887**	■	10	110	12 x 100	55 / 45	65 / 35	85 / 15	TX50	50
FBS II 10x120 65/55/35 SK	**536888**	■	10	130	12 x 120	55 / 65	65 / 55	85 / 35	TX50	50

ACCESSORIES

Checking gauge **FUP**

Nut SW

Nut TX

FMB T40 Maxx Bit

Profi-bit **FPB T50 5/16"**

Item	Art.-No.	Internal diameter D [mm]	Drive	Match	Sales unit [pcs]
Checking gauge FUP 8	**537200**	9,9	–	FBS II 8	1
Checking gauge FUP 10	**537201**	12,0	–	FBS II 10	1
Checking gauge FUP 12	**537202**	13,0	–	FBS II 12	1
Checking gauge FUP 14	**537203**	15,0	–	FBS II 14	1
Nut SW13	**538578**	–	1/2" / SW13	FBS II 8	1
Nut SW15	**538579**	–	1/2" / SW15	FBS II 10	1
Nut SW17	**538580**	–	1/2" / SW17	FBS II 12	1
Nut SW21	**538581**	–	1/2" / SW21	FBS II 14	1
Nut TX40	**538575** 1)	–	1/2" - 1/4"	FBS II 8 / FBS II 8 SK	1
Nut TX50	**538576** 2)	–	1/2" - 5/16"	FBS II 10 / FBS II 10 SK	1
FMB T40 Maxx Bit W 5	**533159**	–	TX40	FBS II 8 / FBS II 8 SK	10
FPB Profi-Bit T50 5/16"	**538574**	–	TX50	FBS II 10 SK	1

1) Suitable for FMB T40 Maxx Bit

2) Suitable for FPB Profi-Bit T50 5/16"

ACCESSORIES

Filling washer **FFD**

Washer **U**

Item	Art.-No.	Internal diameter D [mm]	External-Ø d [mm]	Match	Sales unit [pcs]
FFD 22 x 9 x 6	**547515**	9,0	22	FBS II 6	4
FFD 26 x 12 x 6	**538458**	12,0	26	FBS II 8	4
FFD 30 x 14 x 6	**538459**	14,2	30	FBS II 10 / FBS II 12	4
FFD 38 x 19 x 7	**538460**	19.2	38	FBS II 14	4
FFD 30x14x6 A4	**541987**	14,0	30	FBS II 10 A4 / FBS II 12 A4	4
Washer for FBS 10	**520471**	13,5	44	FBS II 10	50

TECHNICAL DATA

ULTRACUT FBS II US A4 - hexagon head with molded washer, stainless steel A4

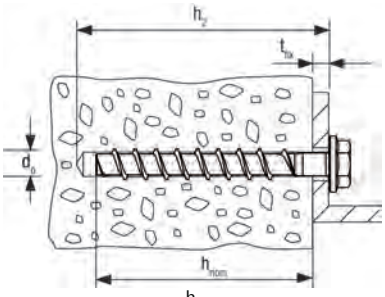

ULTRACUT FBS II SK A4 - countersunk head, stainless steel A4

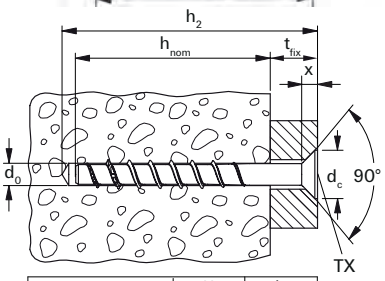

	X [mm]	dc [mm]
FBS II 8	7	23
FBS II 10	7	25

Item	Art.-No. A4	Approval ETA	Drill hole diameter d_0 [mm]	Min. drill hole depth for through fixings h_2 [mm]	Screw length l_s [mm]	Screw-in depth with fixture thickness h_{nom1} / t_{fix} [mm]	Screw-in depth with fixture thickness h_{nom2} / t_{fix} [mm]	Screw-in depth with fixture thickness h_{nom3} / t_{fix} [mm]	Drive	Sales unit [pcs]
FBS II 8x60 10/- US A4	**543565**	■	8	70	60	50 / 10	- / -	- / -	SW 13	50
FBS II 8x70 5/- US A4	**543566**	■	8	80	70	50 / 20	- / -	65 / 5	SW 13	50
FBS II 8x80 15/- US A4	**543567**	■	8	90	80	50 / 30	- / -	65 / 15	SW 13	50
FBS II 8x90 25/- US A4	**543568**	■	8	100	90	50 / 40	- / -	65 / 25	SW 13	50
FBS II 10x60 5/-/- US A4	**543569**	■	10	70	60	55 / 5	- / -	- / -	SW 15	50
FBS II 10x70 15/5/- US A4	**543570**	■	10	80	70	55 / 15	65 / 5	- / -	SW 15	50
FBS II 10x80 25/15/- US A4	**543571**	■	10	90	80	55 / 25	65 / 15	- / -	SW 15	50
FBS II 10x90 5/- US A4	**543572**	■	10	100	90	55 / 35	65 / 25	85 / 5	SW 15	50
FBS II 10x100 15/- US A4	**543573**	■	10	110	100	55 / 45	65 / 35	85 / 15	SW 15	50
FBS II 10x120 35/- US A4	**543574**	■	10	130	120	55 / 65	65 / 55	85 / 35	SW 15	50
FBS II 12x70 10/-/- US A4	**543575**	■	12	80	70	60 / 10	- / -	- / -	SW 17	20
FBS II 12x85 25/10/- US A4	**543576**	■	12	95	85	60 / 25	75 / 10	- / -	SW 17	20
FBS II 12x110 10/- US A4	**543577**	■	12	120	110	60 / 50	75 / 35	100 / 10	SW 17	50
FBS II 12x130 30/- US A4	**543578**	■	12	140	130	60 / 70	75 / 55	100 / 30	SW 17	20
FBS II 8x60 10/- SK A4	**543579**	■	8	70	60	50 / 10	- / -	- / -	TX40	50
FBS II 8x80 15/- SK A4	**543580**	■	8	90	80	50 / 30	- / -	65 / 15	TX40	50
FBS II 8x90 25/- SK A4	**543581**	■	8	100	90	50 / 40	- / -	65 / 25	TX40	50
FBS II 10x65 10/-/- SK A4	**543582**	■	10	75	65	55 / 10	- / -	- / -	TX50	50
FBS II 10x80 25/15/- SK A4	**543583**	■	10	90	80	55 / 25	65 / 15	- / -	TX50	50
FBS II 10x95 10/- SK A4	**543584**	■	10	105	95	55 / 40	65 / 30	85 / 10	TX50	50
FBS II 10x100 15/- SK A4	**543585**	■	10	110	100	55 / 45	65 / 35	85 / 15	TX50	50
FBS II 10x120 35/- SK A4	**543586**	■	10	130	120	55 / 65	65 / 55	85 / 35	TX50	50

TECHNICAL DATA

ULTRACUT FBS II 6 P - panhead

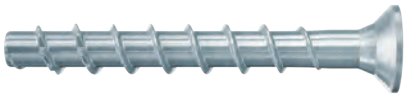

ULTRACUT FBS II 6 SK - panhead

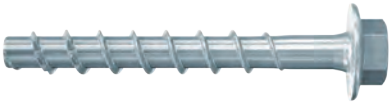

ULTRACUT FBS II 6 US - hexagon head with molded washer

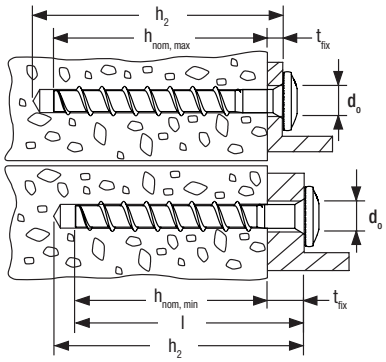

	Art.-No.	Approval ETA	Drill hole diameter d_0 [mm]	Min. drill hole depth for through fixings h_2 [mm]	Screw length l_s [mm]	Head-Ø d_K [mm]	Screw-in depth $h_{nom,min}$ - $h_{nom,max}$ [mm]	Usable length $t_{fix,min}$ - $t_{fix,max}$ [mm]	Drive	Sales unit [pcs]
Item	gvz									
FBS II 6 x 30/5 P	**546377**	■	6	40	30	14.4	25	Screw length - h_{nom}	T30	100
FBS II 6 x 40/5 P	**546378**	■	6	50	40	14.4	25 - 35	Screw length - h_{nom}	T30	100
FBS II 6 x 40/5 LP	**546379**	■	6	50	40	17.5	25 - 35	Screw length - h_{nom}	T30	100
FBS II 6 x 60/5 P	**546380**	■	6	70	60	14.4	25 - 55	Screw length - h_{nom}	T30	100
FBS II 6 x 80/25 P	**546381**	■	6	90	80	14.4	25 - 55	Screw length - h_{nom}	T30	100
FBS II 6 x 30/5 SK	**546382**	■	6	40	30	13.5	25	Screw length - h_{nom}	T30	100
FBS II 6 x 40/5 SK	**546383**	■	6	50	40	13.5	25 - 35	Screw length - h_{nom}	T30	100
FBS II 6 x 60/5 SK	**546384**	■	6	70	60	13.5	25 - 55	Screw length - h_{nom}	T30	100
FBS II 6 x 80/25 SK	**546385**	■	6	90	80	13.5	25 - 55	Screw length - h_{nom}	T30	100
FBS II 6 x 100/45 SK	**546386**	■	6	110	100	13.5	25 - 55	Screw length - h_{nom}	T30	100
FBS II 6 x 120/65 SK	**546387**	■	6	130	120	13.5	25 - 55	Screw length - h_{nom}	T30	100
FBS II 6 x 140/85 SK	**546388**	■	6	150	140	13.5	25 - 55	Screw length - h_{nom}	T30	100
FBS II 6 x 160/105 SK	**546389**	■	6	170	160	13.5	25 - 55	Screw length - h_{nom}	T30	100
FBS II 6 x 40/5 US	**546390**	■	6	50	40	17	25 - 35	Screw length - h_{nom}	SW 10	100
FBS II 6 x 60/5 US	**546391**	■	6	70	60	17	25 - 55	Screw length - h_{nom}	SW 10	100
FBS II 6 x 80/25 US	**546392**	■	6	90	80	17	25 - 55	Screw length - h_{nom}	SW 10	100
FBS II 6 x 100/45 US	**546393**	■	6	110	100	17	25 - 55	Screw length - h_{nom}	SW 10	100
FBS II 6 x 120/65 US	**546394**	■	6	130	120	17	25 - 55	Screw length - h_{nom}	SW 10	100

Steel anchor

TECHNICAL DATA

ULTRACUT FBS II M8/M10 - outside diamater

ULTRACUT FBS II M8/M10 I - internal thread M8/M10

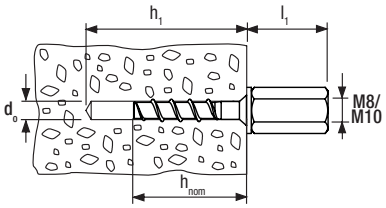

	Art.-No.	Approval ETA	Drill hole diameter d_0 [mm]	Min. drill hole depth for pre-positioned installation h_1 [mm]	Projection length l_1 [mm]	Screw-in depth h_{nom} [mm]	Drive	Sales unit [pcs]	
Item	gvz								
FBS II 6 x 25 M8/19	**546395**	■	6	35	19	25	SW 10	100	
FBS II 6 x 35 M8/19	**546396**	■	6	45	19	35	SW 10	100	
FBS II 6 x 55 M8/19	**546397**	■	6	65	19	55	SW 10	100	
FBS II 6 x 35 M10/21	**546398**	■	6	45	21	35	SW 13	100	
FBS II 6 x 55 M10/21	**546399**	■	6	65	21	55	SW 13	100	
FBS II 6 x 35 M8/M10 I	**546400**	■	6	45	37	35	SW 13	100	
FBS II 6 x 55 M8/M10 I	**546401**	■	6	65	37	55	SW 13	100	

Hammerset anchor EA II
The internally threaded anchor with rim for simple hammerset installation

TECHNICAL DATA

Hammerset anchor **EA II**, with reduced anchorage depth h_{ef} 25 mm and a black fixing point which prevents the anchor from falling out of the drill hole.

Hammerset anchor **EA II**. Not suitable for diamond drilling appliances and diamond saws.

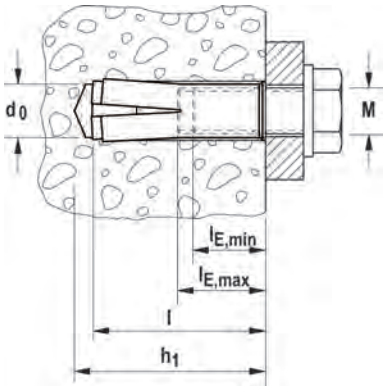

	Zinc-plated steel	Stainless steel	Approval	Drill hole diameter	Min. drill hole depth for pre-positioned installation	Anchor length	Internal thread	Min. bolt penetration	Max. bolt penetration	Sales unit
	Art.-No.	Art.-No.	ETA	d_0 [mm]	h_1 [mm]	l [mm]	M	$l_{E,min}$ [mm]	$l_{E,max}$ [mm]	[pcs]
Item	gvz	A4								
EA II M 6 x 25	**532230**	—	■	8	27	25	M 6	6	14	100
EA II M 6 x 30	**048264**	**048410**	■	8	32	30	M 6	6	14	100
EA II M 8 x 25	**532231**	—	■	10	27	25	M 8	8	14	100
EA II M 8 x 30	**048284**	**048411**	■	10	33	30	M 8	8	14	100
EA II M 8 x 40	**048323**	**048412**	■	10	43	40	M 8	8	14	50
EA II M 10 x 25	**532232**	—	■	12	27	25	M 10	10	14	50
EA II M 10 x 30	**048332**	—	■	12	33	30	M 10	10	14	50
EA II M 10 x 40	**048339**	**048414**	■	12	43	40	M 10	10	17	50
EA II M 12 x 25	**532233**	—	■	15	27	25	M 12	12	14	25
EA II M 12 x 50	**048406**	**048415**	■	15	54	50	M 12	12	22	25
EA II M 16 x 65	**048408**	**048416**	■	20	70	65	M 16	16	28	20
EA II M 20 x 80	**048409**	**048417**	■	25	85	80	M 20	20	34	10

Associated setting tool for manual installation (EHS Plus), for installation with hammer drill (EMS)

ACCESSORIES

Stop drill **EBB**

Item	Art.-No.	Tool holder	Drill hole diameter [mm]	Drill hole depth [mm]	Match	Sales unit [pcs]
EBB 8 x 25	**532607**	SDS plus	8	27	EA II M 6 x 25	1
EBB 10 x 25	**532608**	SDS plus	10	27	EA II M 8 x 25	1
EBB 12 x 25	**532609**	SDS plus	12	27	EA II M 10 x 25	1
EBB 15 x 25	**532610**	SDS plus	15	27	EA II M 12 x 25	1

ACCESSORIES

Machine setting tool **EMS**

Item	Art.-No.	Tool holder	Match	Sales unit [pcs]
EMS M 6 x 25/30	**048065**	SDS plus	EA II M 6 x 25, EA II M 6 x 30	1
EMS M 8 x 25/30	**048066**	SDS plus	EA II M 8 x 25, EA II M 8 x 30	1
EMS M 8 x 40	**048067**	SDS plus	EA II M 8 x 40	1
EMS M 10 x 25/30	**048068** 1)	SDS plus	EA II M 10 x 25, EA II M 10 x 30	1
EMS M 10 x 40	**048070**	SDS plus	EA II M 10 x 40	1
EMS M 12 x 50	**048071**	SDS plus	EA II M 12 x 50 D, EA II M 12 x 50, EA M 12 x 50 N D	1
EMS M 16 x 65	**048072** 1)	SDS max	EA II M 16 x 65	1
EMS M 20 x 80	**048073** 1)	SDS max	EA II M 20 x 80	1

1) Delivery time on request.

ACCESSORIES

Setting tool **EHS Plus** with hand impact protection for your safety and embossing tool.

Item	Art.-No.	Match	Sales unit [pcs]
EHS M 6 x 25/30 Plus	**044630**	EA II M 6 x 25, EA II M 6 x 30	1
EHS M 8 x 25/30 Plus	**044631**	EA II M 8 x 25, EA II M 8 x 30	1
EHS M 8 x 40 Plus	**044632**	EA II M 8 x 40	1
EHS M 10 x 25/30 Plus	**048487**	EA II M 10 x 25, EA II M 10 x 30	1
EHS M 12 x 25 Plus	**532568**	EA II M 12 x 25	1
EHS M 10 x 40 Plus	**044633**	EA II M 10 x 40	1
EHS M 12 x 50 Plus	**044634**	EA II M 12 x 50, EA II M 12 x 50 D	1
EHS M 16 x 65 Plus	**044635**	EA II M 16 x 65	1
EHS M 20 x 80 Plus	**044636**	EA II M 20 x 80	1

Nail anchor FNA II
The installation-friendly hammerset anchor for multiple fixings

TECHNICAL DATA

Nail anchor **FNA II** with nail head

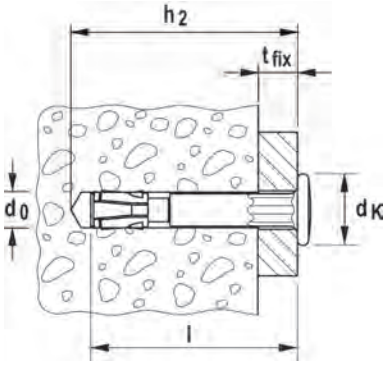

	Zinc-plated steel Art.-No.	Stainless steel Art.-No.	Highly corrosion resistant steel Art.-No.	Approval ETA	Drill hole diameter d_0 [mm]	Min. drill hole depth for through fixings h_2 [mm]	Anchor length l [mm]	Max. fixture thickness t_{fix} [mm]	Head-Ø d_K [mm]	Sales unit [pcs]	
Item	gvz	A4	C								
FNA II 6 x 25/5	**044121** 1)	–	–	■	6	40	35	5	13.0	100	
FNA II 6 x 30/5	**044115** 1)	**044122**	–	■	6	45	40	5	13.0	100	
FNA II 6 x 30/5	–	–	**044124**	■	6	45	40	5	13.0	25	
FNA II 6 x 30/30	**044116**	**044123**	–	■	6	70	65	30	13.0	50	
FNA II 6 x 30/30	–	–	**044125**	■	6	70	65	30	13.0	25	
FNA II 6 x 30/50	**044117**	**046024**	**500569**	■	6	90	85	50	13.0	50	
FNA II 6 x 30/75	**044118**	–	**500573** 2)	■	6	115	110	75	13.0	50	
FNA II 6 x 30/100	**044119**	–	**500574** 3)	■	6	140	135	100	13.0	50	
FNA II 6 x 30/120	**044120**	–	**500575** 3)	■	6	160	155	120	13.0	50	

1) with hexagon below the nail head for anti-rotation lock of hole and wire hangers (for example) and centring for optional setting tool FNA-S

2) On request.

3) Delivery time on request.

TECHNICAL DATA

Nail anchor **FNA II M6**
with thread and flange nut

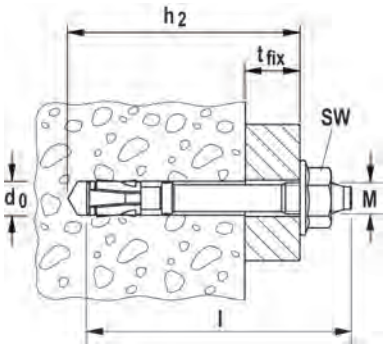

	Zinc-plated steel Art.-No.	Stainless steel Art.-No.	Highly corrosion resistant steel Art.-No.	Approval ETA	Drill hole diameter d_0 [mm]	Min. drill hole depth for through fixings h_2 [mm]	Anchor length l [mm]	Max. fixture thickness t_{fix} [mm]	Thread M	Width across nut ⬡ SW [mm]	Sales unit [pcs]
Item	gvz	A4	C								
FNA II 6 x 25 M6/5	**044111**	–	–	■	6	40	45	5	M 6	10	100
FNA II 6 x 30 M6/5	**044109**	–	–	■	6	45	50	5	M 6	10	100
FNA II 6 x 30 M6/5	–	**044112** 2)	–	■	6	45	50	5	M 6	10	50
FNA II 6 x 30 M6/5	–	–	**044113** 2)	■	6	45	50	5	M 6	10	25
FNA II 6 x 30 M6 x 41	**044110** 1)	–	–	■	6	40	41	–	M 6	10	100
FNA II 6 x 30 M6/10	**046022**	–	–	■	6	45	55	10	M 6	10	100
FNA II 6 x 30 M8/5	**044114**	–	–	■	6	45	51	5	M 8	13	50

1) without nut; e.g. for fixing of pipe clamps

2) with nut and washer (no flange nut)

Ceiling nail FDN II
The installation-friendly push-through anchor for multiple fixings

TECHNICAL DATA

Ceiling nail **FDN II**

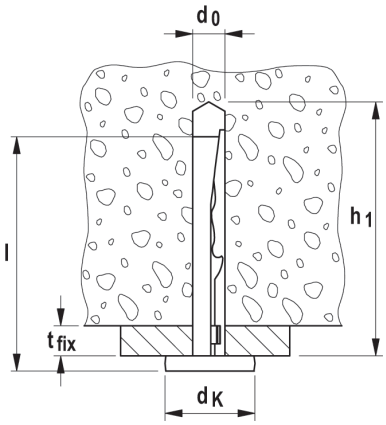

	Art.-No. gvz	Approval ETA	Drill diameter d_0 [mm]	Anchor length l [mm]	Max. fixture thickness t_{fix} [mm]	Min. drill hole depth without cleaning h_1 [mm]	Min. drill hole depth with cleaning h_1 [mm]	Head-Ø d_K [mm]	Sales unit [pcs]
Item	gvz								
FDN II 6/5	**545636**	■	6	40	5	47	42	15	100
FDN II 6/35	**545637**	■	6	70	35	77	72	15	100
FDN II 6/5 K	**545638**	■	6	33	5	40	35	15	100
FDN II 6/35 K	**545639**	■	6	64	35	70	65	15	100

Aircrete anchor FPX-I
The strong internally threaded anchor with unique 4-way expansion for fixings in aerated concrete

TECHNICAL DATA

Aircrete anchor **FPX-I**

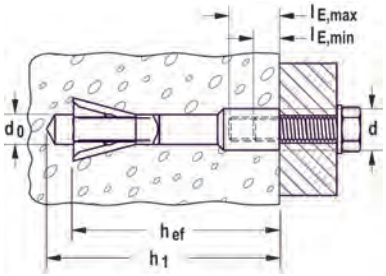

	Art.-No.	Approval ETA	Drill diameter d_0 [mm]	Min. drill hole depth for pre-positioned installation h_1 [mm]	Anchor length l [mm]	Effect. anchorage depth h_{ef} [mm]	Min. bolt penetration $l_{E,min}$ [mm]	Max. bolt penetration $l_{E,max}$ [mm]	Sales unit [pcs]
Item	gvz								
FPX M6-I	**519021**	■	10	95	75	70	10	15	25
FPX M8-I	**519022**	■	10	95	75	70	8	15	25
FPX M10-I	**519023**	■	10	95	75	70	10	15	25
FPX M12-I	**519024**	■	10	95	75	70	12	15	25

ACCESSORIES

Setting tool **FPX M6 I**

Setting tool **FPX M8-M12 I**

Item	Art.-No.	Matching anchor type	Sales unit [pcs]
Setting tool FPX M6 I	**522517**	FPX M6-I	10
Setting tool FPX M8-M12 I	**522518**	FPX M8-I - FPX M12-I	10

Injection mortar FIS HB
The best performance in cracked concrete

TECHNICAL DATA

Injection mortar **FIS HB 345 S**
+ static mixer **FIS MR Plus**

Injection mortar **FIS HB 150 C**

Item	Art.-No.	Approval ETA	Languages on the cartridge	Scale unit	Contents	Sales unit [pcs]
FIS HB 345 S	**033211**	■	DE, EN, FR, ES, NL, CS	180	1 cartridge 360 ml, 2 x FIS MR Plus	6
FIS HB 150 C	**519665**	■	DE, FR, NL	70	1 cartridge 145 ml, 2 x FIS MR Plus	6
FIS MR Plus	**545853**	–	–	–	10 static mixer FIS MR Plus	10

Highbond-Resin Capsule FHB II-P / FHB II-PF
The best performance in cracked concrete

TECHNICAL DATA

Resin capsule **FHB II-P** (standard)

Item	Art.-No.	Approval ETA	Drill hole diameter d_0 [mm]	Drill hole depth h_0 [mm]	Anchorage depth h_{ef} [mm]	Match	Sales unit [pcs]	
FHB II-P 8 x 60	**096824**	■	10	75	60	FHB II-A L M 8 x 60	10	
FHB II-P 10 x 60	**096847**	■	10	75	60	FHB II-S M 10 x 60	10	
FHB II-P 10 x 75	**508016**	■	10	90	75	FHB II-A S M 10 x 75	10	
FHB II-P 10 x 95	**096843**	■	12	110	95	FHB II-A L M 10 x 95	10	
FHB II-P 12 x 75	**096848**	■	12	90	75	FHB II-A S M 12 x 75	10	
FHB II-P 12 x 100	**507922**	■	14	115	100	FHB II-A L M 12 x 100	10	
FHB II-P 12 x 120	**096844**	■	14	135	120	FHB II-A L M 12 x 120	10	
FHB II-P 16 x 95	**096849**	■	16	110	95	FHB II-A S M 16 x 95	10	
FHB II-P 16 x 125	**507923**	■	18	145	125	FHB II-A L M 16 x 125	10	
FHB II-P 16 x 145	**507924**	■	18	165	145	FHB II-A L M 16 x 145	10	
FHB II-P 16 x 160	**096845**	■	18	175	160	FHB II-A L M 16 x 160	10	
FHB II-P 20 x 170	**507925**	■	25	190	170	FHB II-A S M 20 x 170	4	
FHB II-P 20 x 210	**096846**	■	25	235	210	FHB II-A L M 20 x 210	4	
FHB II-P 24 x 170	**096851**	■	25	190	170	FHB II-A S M 24 x 170	4	
FHB II-P 24 x 210	**507926**	■	25	235	210	FHB II-A L M 24 x 210	4	

TECHNICAL DATA

Resin capsule **FHB II-PF HIGH SPEED**
(quick version)

Item	Art.-No.	Approval ETA	Drill hole diameter d_0 [mm]	Drill hole depth h_0 [mm]	Anchorage depth h_{ef} [mm]	Match	Sales unit [pcs]	
FHB II-PF 8 x 60	**500542**	■	10	75	60	FHB II-A L M 8 x 60	10	
FHB II-PF 10 x 60	**500547**	■	10	75	60	FHB II-S M 10 x 60	10	
FHB II-PF 10 X 75	**507999**	■	10	90	75	FHB II-A S M 10 x 75	10	
FHB II-PF 10 x 95	**500543**	■	12	110	95	FHB II-A L M 10 x 95	10	
FHB II-PF 12 x 75	**500548**	■	12	90	75	FHB II-A S M 12 x 75	10	
FHB II-PF 12 x 100	**508000**	■	14	115	100	FHB II-A L M 12 x 100	10	
FHB II-PF 12 x 120	**500544**	■	14	135	120	FHB II-A L M 12 x 120	10	

TECHNICAL DATA

Resin capsule **FHB II-PF HIGH SPEED** (quick version)

Item	Art.-No.	Approval ETA	Drill hole diameter d_0 [mm]	Drill hole depth h_0 [mm]	Anchorage depth h_{ef} [mm]	Match	Sales unit [pcs]	
FHB II-PF 16 x 95	**500549**	■	16	110	95	FHB II-A S M 16 x 95	10	
FHB II-PF 16 x 125	**508001**	■	18	145	125	FHB II-A L M 16 x 125	10	
FHB II-PF 16 x 145	**508002**	■	18	165	145	FHB II-A L M 16 x 145	10	
FHB II-PF 16 x 160	**500545**	■	18	175	160	FHB II-A L M 16 x 160	10	
FHB II-PF 20 x 170	**508003**	■	25	190	170	FHB II-A S M 20 x 170	4	
FHB II-PF 20 x 210	**500546**	■	25	235	210	FHB II-A L M 20 x 210	4	
FHB II-PF 24 x 170	**500550**	■	25	190	170	FHB II-A S M 24 x 170	4	
FHB II-PF 24 x 210	**508004**	■	25	235	210	FHB II-A L M 24 x 210	4	

Highbond anchor FHB II-A S / FHB II A-L
The best performance in cracked concrete with the least installation effort

TECHNICAL DATA

Highbond anchor **FHB II-A S** (short version)

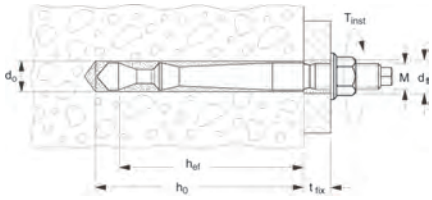

Item	Zinc-plated steel Art.-No. gvz	Stainless steel Art.-No. A4	Highly corrosion resistant steel Art.-No. C	Approval ETA	Drill hole diameter d_0 [mm]	Drill hole depth h_0 [mm]	Anchorage depth h_{ef} [mm]	Usable length t_{fix} [mm]	Thread M	Width across nut ⬡ SW [mm]	Sales unit [pcs]
FHB II-A S M10 x 60/10	**097072**	**097630**	**097704** 1)	■	10	75	60	10	M 10	17	10
FHB II-A S M10 x 60/20	**097073**	**097631**	–	■	10	75	60	20	M 10	17	10
FHB II-A S M10 x 60/40	–	**097632**	–	■	10	75	60	40	M 10	17	10
FHB II-A S M10 x 60/60	**097074**	**097633**	–	■	10	75	60	60	M 10	17	10
FHB II-A S M10 x 60/100	**097206**	**097634**	–	■	10	75	60	100	M 10	17	10
FHB II-A S M10 x 75/10	**506884**	**506888**	–	■	10	90	75	10	M 10	17	10
FHB II-A S M10 x 75/20	**506885**	**506889**	–	■	10	90	75	20	M 10	17	10
FHB II-A S M10 x 75/40	–	**506890**	–	■	10	90	75	40	M 10	17	10
FHB II-A S M10 x 75/60	**506886**	**506891**	–	■	10	90	75	60	M 10	17	10
FHB II-A S M10 x 75/100	**506887**	**506892**	–	■	10	90	75	100	M 10	17	10
FHB II-A S M12 x 75/10	**097257**	**097635**	–	■	12	90	75	10	M 12	19	10
FHB II-A S M12 x 75/25	**097268**	**097636**	**097706** 1)	■	12	90	75	25	M 12	19	10
FHB II-A S M12 x 75/40	–	**097637**	–	■	12	90	75	40	M 12	19	10
FHB II-A S M12 x 75/60	**097274**	**097638**	–	■	12	90	75	60	M 12	19	10
FHB II-A S M12 x 75/100	**097275**	**097639**	–	■	12	90	75	100	M 12	19	10
FHB II-A S M12 x 75/165	**097280**	**097640**	–	■	12	90	75	165	M 12	19	10
FHB II-A S M16 x 95/30	**097281**	**097641**	**097708** 1)	■	16	110	95	30	M 16	24	10
FHB II-A S M16 x 95/60	**097286**	**097642**	–	■	16	110	95	60	M 16	24	10
FHB II-A S M16 x 95/100	**097295**	**097643**	–	■	16	110	95	100	M 16	24	10
FHB II-A S M16 x 95/165	**097296**	**097644**	–	■	16	110	95	165	M 16	24	10
FHB II-A S M20 x 170/50	**506917**	**506919**	–	■	25	190	170	50	M 20	30	4
FHB II-A S M24 x 170/50	**097297**	**097645**	–	■	25	190	170	50	M 24	36	4

1) Delivery time on request.

TECHNICAL DATA

Highbond anchor **FHB II-A L** (long version)

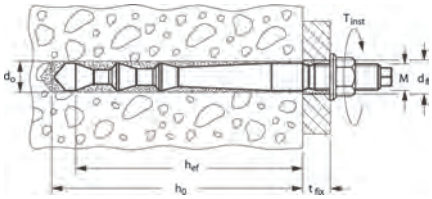

	Zinc-plated steel Art.-No.	Stainless steel Art.-No.	Highly corrosion resistant steel Art.-No.	Approval ETA	Drill hole diameter d_0 [mm]	Drill hole depth h_0 [mm]	Anchorage depth h_{ef} [mm]	Usable length t_{fix} [mm]	Thread M	Width across nut ⬡ SW [mm]	Sales unit [pcs]
Item	gvz	A4	C								
FHB II-A L M8 x 60/10	**097032**	**097298**	**097696** 1)	■	10	75	60	10	M 8	13	10
FHB II-A L M8 x 60/30	**097033**	**097299**	–	■	10	75	60	30	M 8	13	10
FHB II-A L M8 x 60/50	**097034**	**097440**	–	■	10	75	60	50	M 8	13	10
FHB II-A L M10 x 95/10	**096907**	**097616**	–	■	12	110	95	10	M 10	17	10
FHB II-A L M10 x 95/20	**096940**	**097617**	**097699** 1)	■	12	110	95	20	M 10	17	10
FHB II-A L M10 x 95/40	–	**097618**	–	■	12	110	95	40	M 10	17	10
FHB II-A L M10 x 95/60	**096941**	**097619**	–	■	12	110	95	60	M 10	17	10
FHB II-A L M10 x 95/100	**096942**	**097620**	–	■	12	110	95	100	M 10	17	10
FHB II-A L M12 x 100/10	**506893**	**506897**	–	■	14	115	100	10	M 12	19	10
FHB II-A L M12 x 100/25	**506894**	**506898**	–	■	14	115	100	25	M 12	19	10
FHB II-A L M12 x 100/40	–	**506899**	–	■	14	115	100	40	M 12	19	10
FHB II-A L M12 x 100/50 GS A4	–	**537065**	–	■	14	115	100	50	M 12	19	10
FHB II-A L M12 x 100/60	**506895**	**506901**	–	■	14	115	100	60	M 12	19	10
FHB II-A L M12 x 100/100	**506896**	**506902**	–	■	14	115	100	100	M 12	19	10
FHB II-A L M12 x 120/10	**096943**	**097621**	–	■	14	135	120	10	M 12	19	10
FHB II-A L M12 x 120/25	**096944**	**097622**	**097700** 1)	■	14	135	120	25	M 12	19	10
FHB II-A L M12 x 120/40	–	**097623**	–	■	14	135	120	40	M 12	19	10
FHB II-A L M12 x 120/60	**097014**	**097624**	–	■	14	135	120	60	M 12	19	10
FHB II-A L M12 x 120/100	**097031**	**097625**	–	■	14	135	120	100	M 12	19	10
FHB II-A L M16 x 125/30	**506903**	**506906**	–	■	18	140	125	30	M 16	24	10
FHB II-A L M16 x 125/60	**506904**	**506909**	–	■	18	140	125	60	M 16	24	10
FHB II-A L M16 x 125/100	**506905**	**506910**	–	■	18	140	125	100	M 16	24	10
FHB II-A L M16 x 145/30	**506911**	**506914**	–	■	18	160	145	30	M 16	24	10
FHB II-A L M16 x 145/60	**506912**	**506915**	–	■	18	160	145	60	M 16	24	10
FHB II-A L M16 x 145/100	**506913**	**506916**	–	■	18	160	145	100	M 16	24	10
FHB II-A L M16 x 160/30	**097035**	**097626**	**097702** 1)	■	18	175	160	30	M 16	24	10
FHB II-A L M16 x 160/60	**097038**	**097627**	–	■	18	175	160	60	M 16	24	10
FHB II-A L M16 x 160/100	**097070**	**097628**	–	■	18	175	160	100	M 16	24	10
FHB II-A L M20 x 210/50	**097071**	**097629**	**097703** 1)	■	25	235	210	50	M 20	30	4
FHB II-A L M20 x 210/150	**052370**	–	–	■	25	235	210	150	M 20	30	8
FHB II-A L M24 x 210/50	**506920**	**506921**	–	■	25	235	210	50	M 24	36	4

1) Delivery time on request.

Superbond mortar FIS SB
The concrete-allrounder

TECHNICAL DATA

Superbond mortar **FIS SB 390 S**

Static mixer **FIS MR Plus**

		Approval	Languages on the cartridge	Scale unit	Contents	Sales unit
Item	Art.-No.	ETA				[pcs]
FIS SB 390 S	**519451**	■	DE, FR, NL	180	1 cartridge 390 ml, 2 x FIS MR Plus	6
FIS SB 390 S	**520557**	■	DE, SL, SR, BG	180	1 cartridge 390 ml, 2 x FIS MR Plus	6
FIS SB 390 S	**518831**	■	EN, ES, PT	180	1 cartridge 390 ml, 2 x FIS MR Plus	6
FIS SB 390 S	**519450**	■	IT, EN, DE	180	1 cartridge 390 ml, 2 x FIS MR Plus	6
FIS SB 390 S	**520559**	■	DA, SV, NO, FI	180	1 cartridge 390 ml, 2 x FIS MR Plus	6
FIS SB 390 S	**520555**	■	CS, SK, RO	180	1 cartridge 390 ml, 2 x FIS MR Plus	6
FIS SB 390 S	**520595**	■	PL, RU, HU	180	1 cartridge 390 ml, 2 x FIS MR Plus	6
FIS SB 585 S	**519452**	■	EN, ES, PT	270	1 cartridge 585 ml + 2 x FIS UMR	6
FIS SB 585 S	**520526**	■	IT, EN, DE	270	1 cartridge 585 ml + 2 x FIS UMR	6
FIS SB HIGH SPEED 390 S	**523303**	■	PL, RU, HU	180	1 cartridge 390 ml, 2 x FIS MR Plus	6
FIS MR Plus	**545853**	–	–	–	10 static mixer FIS MR Plus	10
FIS UMR	**520593**	–	–	–	10 static mixer FIS UMR for 585 ml and 1500 ml cartridges	10

TECHNICAL DATA

Threaded rod **FIS A**

	Zinc plated, steel grade 5.8 Art.-No.	Zinc plated, steel grade 8.8 Art.-No.	Stainless steel Art.-No.	Approval ETA	Approval ICC	Drill hole diameter d_0 [mm]	Min. / max. anchorage depth [mm]	Min. / max. usable length [mm]	Min. / max. filling quantity FIS SB [scale units]	Sales unit [pcs]
Item	gvz	gvz	A4							
FIS A M 8 x 90	**090274**	**519390**	**090440**	■	▲	10	60 / 78	1 / 19	2 / 3	10
FIS A M 8 x 110	**090275**	**519391**	**090441**	■	▲	10	60 / 98	1 / 39	2 / 3	10
FIS A M 8 x 130	**090276**	**519392**	**090442**	■	▲	10	60 / 118	1 / 59	2 / 4	10
FIS A M 8 x 175	**090277**	**519393**	**090443**	■	▲	10	60 / 160	4 / 104	2 / 5	10
FIS A M 8 x 1000	**509214** 1)	–	**509230** 1)	■	▲	10	60 / 160	–	2 / 5	10
FIS A M 10 x 110	**090278**	–	**090444**	■	▲	12	60 / 96	1 / 37	3 / 4	10
FIS A M 10 x 130	**090279**	**524170**	**090447**	■	▲	12	60 / 116	1 / 57	3 / 5	10
FIS A M 10 x 150	**090281**	**517935**	**090448**	■	▲	12	60 / 136	1 / 77	3 / 5	10
FIS A M 10 x 170	**044969**	**519395**	**044973**	■	▲	12	60 / 156	1 / 97	3 / 6	10
FIS A M 10 x 190	–	**517936**	–	■	▲	12	60 / 176	1 / 117	3 / 7	10
FIS A M 10 x 200	**090282**	**519396**	**090449**	■	▲	12	60 / 186	1 / 127	3 / 7	10
FIS A M 10 x 1000	**509215** 1)	**509223** 1)	**509231** 1)	■	▲	12	60 / 200	–	3 / 7	10
FIS A M 12 x 120	**044971**	**519397**	**044974**	■	▲	14	70 / 103	1 / 34	3 / 5	10
FIS A M 12 x 140	**090283**	**519398**	**090450**	■	▲	14	70 / 123	1 / 54	3 / 6	10
FIS A M 12 x 160	**090284**	**517937**	**090451**	■	▲	14	70 / 143	1 / 74	3 / 7	10
FIS A M 12 x 180	**090285**	**519399**	**090452**	■	▲	14	70 / 163	1 / 94	3 / 7	10
FIS A M 12 x 200	–	**517938**	**519421**	■	▲	14	70 / 183	1 / 114	3 / 8	10
FIS A M 12 x 210	**090286**	–	**090453**	■	▲	14	70 / 193	1 / 124	3 / 9	10
FIS A M 12 x 260	**090287**	–	**090454**	■	▲	14	70 / 240	4 / 174	3 / 10	10
FIS A M 12 x 1000	**509216** 1)	**509224** 1)	**509232** 1)	■	▲	14	70 / 240	–	3 / 10	10
FIS A M 16 x 130	**044972**	**519400**	**044975**	■	▲	18	80 / 109	1 / 30	5 / 7	10
FIS A M 16 x 175	**090288**	**519401**	**090455**	■	▲	18	80 / 154	1 / 75	5 / 10	10
FIS A M 16 x 200	**090289**	**517939**	**090456**	■	▲	18	80 / 179	1 / 100	5 / 11	10
FIS A M 16 x 250	**090290**	**517940**	**090457**	■	▲	18	80 / 229	1 / 150	5 / 14	10

1) Order washer and nut separately.

TECHNICAL DATA

Threaded rod **FIS A**

	Zinc plated, steel grade 5.8 Art.-No.	Zinc plated, steel grade 8.8 Art.-No.	Stainless steel Art.-No.	Approval ETA	Approval ICC	Drill hole diameter d_0 [mm]	Min. / max. anchorage depth [mm]	Min. / max. usable length [mm]	Min. / max. filling quantity FIS SB [scale units]	Sales unit [pcs]
Item	gvz	gvz	A4							
FIS A M 16 x 300	**090291**	**519402**	**090458**	■	▲	18	80 / 279	1 / 200	5 / 17	10
FIS A M 16 x 1000	**509217** 1)	**509225** 1)	**509233** 1)	■	▲	18	80 / 320	–	5 / 19	10
FIS A M 20 x 245	**090292**	**519404**	**090459**	■	▲	24	90 / 220	1 / 131	11 / 28	10
FIS A M 20 x 290	**090293**	**519406**	**090460**	■	▲	24	90 / 265	1 / 176	11 / 32	10
FIS A M 20 x 1000	–	**519410** 1)	**519427** 1)	■	▲	24	90 / 400	–	11 / 48	10
FIS A M 24 x 290	**090294**	–	**090461**	■	▲	28	96 / 260	1 / 165	15 / 39	5
FIS A M 24 x 380	**090295**	–	**090462**	■	▲	28	96 / 350	1 / 255	15 / 52	5
FIS A M 24 x 1000	**533881**	–	–	■	▲	28	96 / 480	–	15 / 69	10
FIS A M 30 x 430	**090297**	–	**090464**	■	▲	35	120 / 394	1 / 275	27 / 88	5

1) Order washer and nut separately.

Injection mortar FIS V
The versatile injection mortar for anchorings in cracked concrete and masonry

TECHNICAL DATA

Injection mortar **FIS V 300 T**

Injection mortar **FIS V 360 S**

Injection mortar **FIS V 410 C**

Static mixer **FIS MR Plus**

		Approval DIBt	Approval ETA	Approval ICC	Languages on the cartridge	Scale unit	Contents	Sales unit
Item	Art.-No.							[pcs]
FIS V 300 T	**531573**	●	■	▲	USA, RA, BR, MEX	150	1 cartridge 300 ml, 2 x FIS MR Plus	12
FIS V 360 S	**094404**	●	■	▲	DE, FR, NL, TR, HU, AR	180	1 cartridge 360 ml, 2 x FIS MR Plus	6
FIS V 360 S	**094405**	●	■	▲	EN, IT, PT, ES, ZH, JA	180	1 cartridge 360 ml, 2 x FIS MR Plus	6
FIS V 360 S	**068435**	●	■	▲	DA, SV, NO, FI, PL, EL	180	1 cartridge 360 ml, 2 x FIS MR Plus	6
FIS V 360 S	**502283**	●	■	▲	LT, LV, ET, UK, RU, KK	180	1 cartridge 360 ml, 2 x FIS MR Plus	6
FIS V 360 S	**043994**	●	■	▲	CS, SK, PL, HU, RO, RU	180	1 cartridge 360 ml, 2 x FIS MR Plus	6
FIS V 410 C	**521431**	●	■	▲	IT, EN, DE	200	1 cartridge 410 ml, 2 x FIS MR Plus	16
FIS V 410 C	**534880**	●	■	▲	PL, LT, LV, ET, RU	200	1 cartridge 410 ml, 2 x FIS MR Plus	12
FIS V 410 C	**538131**	●	■	▲	USA, RA, BR, MEX	200	1 cartridge 410 ml, 2 x FIS MR Plus	12
FIS MR Plus	**545853**	–	–	–	–	–	10 static mixer FIS MR Plus	10

TECHNICAL DATA IN PERFORATED BRICK MASONRY

Threaded rod **FIS A**

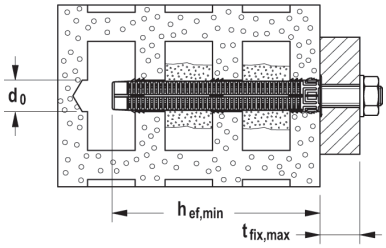

	Zinc plated, steel grade 5.8 Art.-No.	Zinc plated, steel grade 8.8 Art.-No.	Stainless steel Art.-No.	Approval ETA	Drill hole diameter in perforated brick masonry d_0 [mm]	Min. anchorage depth in perforated brick masonry $h_{ef,min}$ [mm]	Max. useful length in perforated brick masonry $t_{fix,max}$ [mm]	Suitable injection anchor sleeve	Sales unit [pcs]
Item	gvz	gvz	A4						
FIS A M 6 x 70	**046204**	–	–	■	12	50	11	FIS H 12 x 50 K	10
FIS A M 6 x 75	**090243**	–	**090437**	■	12	50	16	FIS H 12 x 50 K	20
FIS A M 6 x 85	**090272**	–	–	■	12	50	26	FIS H 12 x 50 K	20
FIS A M 6 x 110	**090273**	–	**090439**	■	12	50 85	52 17	FIS H 12 x 50 K FIS H 12 x 85 K	20
FIS A M 8 x 90	**090274**	**519390**	**090440**	■	12	50	29	FIS H 12 x 50 K	10
FIS A M 8 x 110	**090275**	**519391**	**090441**	■	12 12 16	50 85 85	49 14 14	FIS H 12 x 50 K FIS H 12 x 85 K FIS H 16 x 85 K	10
FIS A M 8 x 130	**090276**	**519392**	**090442**	■	12/16	50 85 85	69 34 34	FIS H 12 x 50 K FIS H 12 x 85 K FIS H 16 x 85 K	10
FIS A M 8 x 175	**090277**	**519393**	**090443**	■	12 12 16	50 85 85 130	114 79 79 34	FIS H 12 x 50 K FIS H 12 x 85 K FIS H 16 x 85 K FIS H 16 x 130 K	10
FIS A M 10 x 110	**090278**	–	**090444**	■	16	85	12	FIS H 16 x 85 K	10
FIS A M 10 x 130	**090279**	**524170**	**090447**	■	16	85	32	FIS H 16 x 85 K	10
FIS A M 10 x 150	**090281**	**517935**	**090448**	■	16	85 130	52 7	FIS H 16 x 85 K FIS H 16 x 130 K	10
FIS A M 10 x 170	**044969**	**519395**	**044973**	■	16	85 130	72 27	FIS H 16 x 85 K FIS H 16 x 130 K	10
FIS A M 10 x 190	–	**517936**	–	■	16	85 130	92 47	FIS H 16 x 85 K FIS H 16 x 130 K	10
FIS A M 10 x 200	**090282**	**519396**	**090449**	■	16	85 130	102 57	FIS H 16 x 85 K FIS H 16 x 130 K	10
FIS A M 12 x 120	**044971**	**519397**	**044974**	■	20	85	19	FIS H 20 x 85 K	10
FIS A M 12 x 140	**090283**	**519398**	**090450**	■	20	85	39	FIS H 20 x 85 K	10
FIS A M 12 x 160	**090284**	**517937**	**090451**	■	20	85 130	59 14	FIS H 20 x 85 K FIS H 20 x 130 K	10
FIS A M 12 x 180	**090285**	**519399**	**090452**	■	20	85 130	79 34	FIS H 20 x 85 K FIS H 20 x 130 K	10
FIS A M 12 x 200	–	**517938**	–	■	20	85 130	99 54	FIS H 20 x 85 K FIS H 20 x 130 K	10
FIS A M 12 x 210	**090286**	–	**090453**	■	20	85 130	109 64	FIS H 20 x 85 K FIS H 20 x 130 K	10
FIS A M 12 x 260	**090287**	–	**090454**	■	20	85 130 200	169 114 44	FIS H 20 x 85 K FIS H 20 x 130 K FIS H 20 x 200 K	10
FIS A M 16 x 130	**044972**	**519400**	**044975**	■	20	85	25	FIS H 20 x 85 K	10
FIS A M 16 x 175	**090288**	**519401**	**090455**	■	20	85 130	70 25	FIS H 20 x 85 K FIS H 20 x 130 K	10
FIS A M 16 x 200	**090289**	**517939**	**090456**	■	20	85 130	95 50	FIS H 20 x 85 K FIS H 20 x 130 K	10
FIS A M 16 x 250	**090290**	**517940**	**090457**	■	20	85 130 200	145 100 30	FIS H 20 x 85 K FIS H 20 x 130 K FIS H 20 x 200 K	10

TECHNICAL DATA IN PERFORATED BRICK MASONRY

Threaded rod **FIS A**

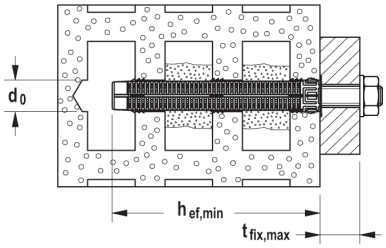

	Zinc plated, steel grade 5.8 Art.-No.	Zinc plated, steel grade 8.8 Art.-No.	Stainless steel Art.-No.	Approval ETA	Drill hole diameter in perforated brick masonry d_0 [mm]	Min. anchorage depth in perforated brick masonry $h_{ef, min}$ [mm]	Max. useful length in perforated brick masonry $t_{fix, max}$ [mm]	Suitable injection anchor sleeve	Sales unit [pcs]
Item	gvz	gvz	A4						
FIS A M 16 x 300	**090291**	**519402**	**090458**	■	20	85 130 200	195 150 80	FIS H 20 x 85 K FIS H 20 x 130 K FIS H 20 x 200 K	10

TECHNICAL DATA

Injection anchor sleeve **FIS H K**

	Art.-No.	Approval ETA	Drill hole diameter d_0 [mm]	Drill hole depth acc. ETA [mm]	Effect. anchorage depth h_{ef} [mm]	Match	Fill quantity per sleeve [scale units]	Sales unit [pcs]
Item								
FIS H 12 x 50 K	**041900**	■	12	55	50	FIS A M6-M8	5	50
FIS H 12 x 85 K	**041901**	■	12	90	85	FIS A M6-M8	10	50
FIS H 16 x 85 K	**041902**	■	16	90	85	FIS A M8-M10, FIS E M6-M8	12	50
FIS H 16 x 130 K	**041903**	■	16	135	110	FIS A M8-M10	15	20
FIS H 20 x 85 K	**041904**	■	20	90	85	FIS A M12-M16, FIS E M10-M12	15	20
FIS H 20 x 130 K	**046703**	■	20	135	110	FIS A M12-M16	25	20
FIS H 20 x 200 K	**046704**	■	20	205	180	FIS A M12-M16	40	20

TECHNICAL DATA IN SOLID BRICK MASONRY

Internal threaded sockets **FIS E**

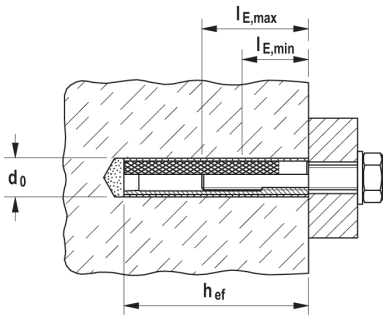

	Zinc-plated steel Art.-No.	Approval ETA	Drill hole diameter d_0 [mm]	Effect. anchorage depth h_{ef} [mm]	Min. bolt penetration $l_{E,min}$ [mm]	Max. bolt penetration $l_{E,max}$ [mm]	Fill quantity for effect. anchorage depth in solid brick masonry [scale units]	Sales unit [pcs]
Item	gvz							
FIS E 11 x 85 M6	**043631**	■	14	85	6	60	4	10
FIS E 11 x 85 M8	**043632**	■	14	85	8	60	4	10
FIS E 15 x 85 M10	**043633**	■	18	85	10	60	5	10
FIS E 15 x 85 M12	**043634**	■	18	85	12	60	5	10

TECHNICAL DATA

FIS VL 300 T

FIS VL 410 C

FIS VL 410 C in bucket

Static mixer **FIS MR Plus**

		Approval	Languages on the cartridge	Scale unit	Contents	Sales unit
Item	Art.-No.	ETA				[pcs]
FIS VL 300 T with clip	**537149**	■	PT, ES, EN	150	1 cartridge 300 ml, 2 x FIS MR Plus	12
FIS VL 300 T with clip	**538583**	■	CS, SK	150	1 cartridge 300 ml, 2 x FIS MR Plus	10
FIS VL 300 T HIGH SPEED with clip	**538585**	■	CS, SK	150	1 cartridge 380 ml, 2 x FIS MR Plus	10
FIS VL 300 T	**539461**	■	EN, FR, ES, PT, RO, AR	150	1 cartridge 300 ml, 2 x FIS MR Plus	12
FIS VL 300 T in bucket	**539462**	■	EN, FR, ES, PT, RO, AR	150	20 cartridges 300 ml, 40 x FIS MR Plus	1
FIS VL 300 T HWK big	**538589**	■	CS, SK	150	20 cartridges 300 ml, 40 x FIS MR Plus	1
FIS VL 410 C	**539463**	■	EN, FR, ES, PT, RO, AR	200	1 cartridge 410 ml, 2 x FIS MR Plus	12
FIS VL 410 C	**538584**	■	CS, SK	200	1 cartridge 410 ml, 2 x FIS MR Plus	12
FIS VL 410 C HIGH SPEED	**538586**	■	CS, SK	200	1 cartridges 410 ml, 1 x FIS MR Plus	12
FIS VL 410 C in bucket	**538549**	■	DE, FR, NL, EN, TR	200	16 cartridges 410 ml, 32 x FIS MR Plus	1
FIS VL 410 C in bucket	**539464**	■	EN, FR, ES, PT, RO, AR	200	16 cartridges 410 ml, 32 x FIS MR Plus	1
FIS VL 410 C HWK big	**538590**	■	CS, SK	200	16 cartridges 410 ml, 32 x FIS MR Plus	1
FIS MR Plus	**545853**	–	–	–	10 static mixer FIS MR Plus	10

Frame fixing SXR
The efficient with short expansion element

TECHNICAL DATA

SXR-FUS - with fischer hexagon head safety screw, moulded washer and integrated T40 bit recess

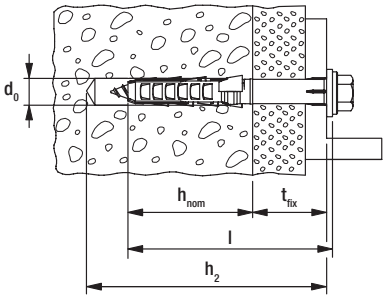

	Zinc-plated steel Art.-No.	Stainless steel Art.-No.	Hot-dip galvanised steel Art.-No.	Approval ETA	Drill hole diameter d_0 [mm]	Min. drill hole depth for through fixings h_2 [mm]	Min. anchorage depth h_{nom} [mm]	Anchor length l [mm]	Max. fixture thickness t_{fix} [mm]	Drive	Sales unit [pcs]
Item	gvz	A4	hdg								
SXR 10 x 52 FUS	**502456** 1)	–	–	■	10	62	50	52	2	T40/SW13	50
SXR 10 x 60 FUS	**046329**	**046339**	–	■	10	70	50	60	10	T40/SW13	50
SXR 10 x 60 FUS	–	–	**509537**	–	10	70	50	60	10	T40/SW13	50
SXR 10 x 80 FUS	**046330**	**046340**	–	■	10	90	50	80	30	T40/SW13	50
SXR 10 x 80 FUS	–	–	**509538**	–	10	90	50	80	30	T40/SW13	50
SXR 10 x 100 FUS	**046331**	**046342**	–	■	10	110	50	100	50	T40/SW13	50
SXR 10 x 100 FUS	–	–	**509539**	–	10	110	50	100	50	T40/SW13	50
SXR 10 x 120 FUS	**046332**	**046343**	–	■	10	130	50	120	70	T40/SW13	50
SXR 10 x 140 FUS	**046333**	**046344**	–	■	10	150	50	140	90	T40/SW13	50
SXR 10 x 140 FUS	–	–	**509540**	–	10	150	50	140	90	T40/SW13	50
SXR 10 x 160 FUS	**046334**	**046345**	–	■	10	170	50	160	110	T40/SW13	50
SXR 10 x 180 FUS	**046335**	**046361**	–	■	10	190	50	180	130	T40/SW13	50
SXR 10 x 200 FUS	**046336**	**046362**	–	■	10	210	50	200	150	T40/SW13	50
SXR 10 x 230 FUS	**046337**	**046363**	–	■	10	240	50	230	180	T40/SW13	50
SXR 10 x 260 FUS	**046338**	**046364**	–	■	10	270	50	260	210	T40/SW13	50

1) not pre-assembled

Frame fixing SXRL
The versatile with multiple anchorage depth

TECHNICAL DATA

SXRL-FUS - with fischer hexagon head safety screw, moulded washer and integrated bit recess

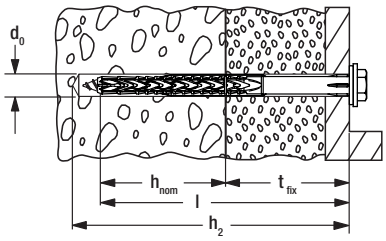

	Zinc-plated steel	Stainless steel	Approval		Drill diameter	Min. drill hole depth for through fixings	Usable length at anchorage depth 50mm	Usable length at anchorage depth 70mm	Usable length at anchorage depth 90mm	Anchor length	Drive	Sales unit
					d_0	h_2	t_{fix}	t_{fix}	t_{fix}	l		
	Art.-No.	Art.-No.	ETA	DIBt	[mm]	[mm]	[mm]	[mm]	[mm]	[mm]		[pcs]
Item	gvz	A4										
SXRL 10 x 60 FUS	**546506**	**546507**	■	–	10	70	10	–	–	60	T40/SW13	50
SXRL 10 x 80 FUS	**522719**	**522730**	■	●	10	90	30	10	–	80	T40/SW13	50
SXRL 10 x 100 FUS	**522720**	**522731**	■	●	10	110	50	30	10	100	T40/SW13	50
SXRL 10 x 120 FUS	**522721**	**522732**	■	●	10	130	70	50	30	120	T40/SW13	50
SXRL 10 x 140 FUS	**522723**	**522733**	■	●	10	150	90	70	50	140	T40/SW13	50
SXRL 10 x 160 FUS	**522724**	**522734**	■	●	10	170	110	90	70	160	T40/SW13	50
SXRL 10 x 180 FUS	**522725**	**522735**	■	●	10	190	130	110	90	180	T40/SW13	50
SXRL 10 x 200 FUS	**522726**	**522736**	■	●	10	210	150	130	110	200	T40/SW13	50
SXRL 10 x 230 FUS	**522727**	**522737**	■	●	10	240	180	160	140	230	T40/SW13	50
SXRL 10 x 260 FUS	**522728** 1)	**522738** 1)	■	●	10	270	210	190	170	260	T40/SW13	50
SXRL 10 x 290 FUS	**522729** 1)	**522739** 1)	■	●	10	300	240	220	200	290	T40/SW13	50
SXRL 14 x 80 FUS	**530946**	**530955**	■	●	14	95	–	10	–	80	T50/SW17	50
SXRL 14 x 100 FUS	**530947**	**530956**	■	●	14	115	–	30	10	100	T50/SW17	50
SXRL 14 x 120 FUS	**530948**	**530957**	■	●	14	135	–	50	30	120	T50/SW17	50
SXRL 14 x 140 FUS	**530949**	**530958**	■	●	14	155	–	70	50	140	T50/SW17	50
SXRL 14 x 160 FUS	**530950**	**530959**	■	●	14	175	–	90	70	160	T50/SW17	50
SXRL 14 x 180 FUS	**530951**	**530960**	■	●	14	195	–	110	90	180	T50/SW17	50
SXRL 14 x 200 FUS	**530952**	**530961**	■	●	14	215	–	130	110	200	T50/SW17	50
SXRL 14 x 230 FUS	**530953**	**530962**	■	●	14	245	–	160	140	230	T50/SW17	50
SXRL 14 x 260 FUS	**530954**	**530963**	■	●	14	275	–	190	170	260	T50/SW17	50

1) not pre-assembled

Stand-off installation Thermax 8/10
The thermally separated stand-off installation in external thermal insulation composite systems (ETICS)

TECHNICAL DATA

Thermax 8 and 10

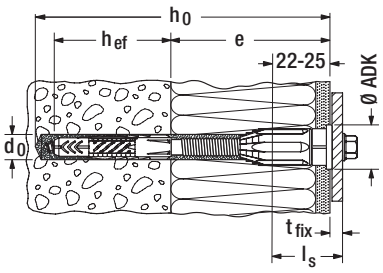

Item	Art.-No.	Drill hole diameter d_0 [mm]	Drill hole depth h_0 [mm]	Usable length e [mm]	Anchorage depth h_{ef} [mm]	Cover cap-Ø ADK [mm]	Width across nut ⬡ SW [mm]	Chipboard / metric / sheet metal screw	Sales unit [pcs]
Thermax 8/60 M6	**045685** 1) 2)	10	120	45 - 60	60	18	10	4,5 - 6,0 / M6 / 6,3	20
Thermax 8/80 M6	**045686** 1) 2)	10	140	60 - 80	60	18	10	4,5 - 6,0 / M6 / 6,3	20
Thermax 8/100 M6	**045687** 1) 2)	10	160	80 - 100	60	18	10	4,5 - 6,0 / M6 / 6,3	20
Thermax 8/120 M6	**045688** 1) 2)	10	180	100 - 120	60	18	10	4,5 - 6,0 / M6 / 6,3	20
Thermax 8/140 M6	**045689** 1) 2)	10	200	120 - 140	60	18	10	4,5 - 6,0 / M6 / 6,3	20
Thermax 8/160 M6	**045690** 1) 2)	10	220	140 - 160	60	18	10	4,5 - 6,0 / M6 / 6,3	20
Thermax 8/180 M6	**045691** 1) 2)	10	240	160 - 180	60	18	10	4,5 - 6,0 / M6 / 6,3	20
Thermax 10/100 M6	**045692** 1) 2)	12	160	80 - 100	70	22	13	4,5 - 6,0 / M6 / 6,3	20
Thermax 10/120 M6	**045693** 1) 2)	12	180	100 - 120	70	22	13	4,5 - 6,0 / M6 / 6,3	20
Thermax 10/140 M6	**045694** 1) 2)	12	200	120 - 140	70	22	13	4,5 - 6,0 / M6 / 6,3	20
Thermax 10/160 M6	**045695** 1) 2)	12	220	140 - 160	70	22	13	4,5 - 6,0 / M6 / 6,3	20
Thermax 10/180 M6	**045696** 1) 2)	12	240	160 - 180	70	22	13	4,5 - 6,0 / M6 / 6,3	20
Thermax 10/200 M6	**512605** 1) 2)	12	260	180 - 200	70	22	13	4,5 - 6,0 / M6 / 6,3	20
Thermax 10/220 M6	**514250** 1) 2)	12	280	200 - 220	70	22	13	4,5 - 6,0 / M6 / 6,3	20
Thermax 10/240 M6	**514251** 1) 2)	12	300	220 - 240	70	22	13	4,5 - 6,0 / M6 / 6,3	20
Thermax 10/100 M8	**045697** 2)	12	160	80 - 100	70	22	13	M8	20
Thermax 10/120 M8	**045698** 2)	12	180	100 - 120	70	22	13	M8	20
Thermax 10/140 M8	**045699** 2)	12	200	120 - 140	70	22	13	M8	20
Thermax 10/160 M8	**045700** 2)	12	220	140 - 160	70	22	13	M8	20
Thermax 10/180 M8	**514252** 2)	12	240	160 - 180	70	22	13	M8	20
Thermax 10/200 M8	**514253** 2)	12	260	180 - 200	70	22	13	M8	20
Thermax 10/220 M8	**514254** 2)	12	280	200 - 220	70	22	13	M8	20
Thermax 10/240 M8	**514255** 2)	12	300	220 - 240	70	22	13	M8	20
Thermax 10/100 M10	**045702** 2)	12	160	80 - 100	70	22	13	M10	20
Thermax 10/120 M10	**045703** 2)	12	180	100 - 120	70	22	13	M10	20
Thermax 10/140 M10	**045704** 2)	12	200	120 - 140	70	22	13	M10	20
Thermax 10/160 M10	**045705** 2)	12	220	140 - 160	70	22	13	M10	20
Thermax 10/180 M10	**514256** 2)	12	240	160 - 180	70	22	13	M10	20
Thermax 10/200 M10	**514257** 2)	12	260	180 - 200	70	22	13	M10	20
Thermax 10/220 M10	**514258** 2)	12	280	200 - 220	70	22	13	M10	20
Thermax 10/240 M10	**514259** 2)	12	300	220 - 240	70	22	13	M10	20

1) including SX 5

2) Min. screw length l_s = 22mm + thickness of mounting member e; for use in wood without universal plug UX, consider drill hole diameter in footnote under load table.

Stand-off installation Thermax 12/16
The approved stand-off installation with thermal barrier in external thermal insulation composite systems (ETICS)

TECHNICAL DATA

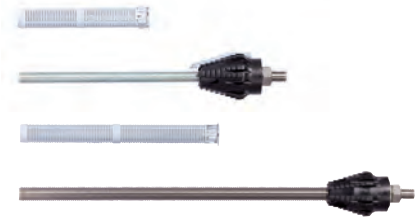

Thermax 12/110 M12

Thermax 16/170 M12

	Zinc-plated steel Art.-No.	Stainless steel Art.-No.	Approval DIBt	Contents	Sales unit [pcs]
Item	gvz	A4			
Thermax 12/110 M12	**051291**	–	●	20 Thermax M12, 20 perforated sleeves 20 x 130, 5 bits, 5 cutting blades, 5 user manuals	20
Thermax 12/110 M12	–	**051537**	●	10 Thermax M12 A4, 10 perforated sleeves 20 x 130, 3 bits, 3 cutting blades, 3 user manuals	10
Thermax 12/110 M12 B	**051290**	–	●	2 Thermax M12, 2 perforated sleeves 20 x 130, 1 bit, 1 cutting blade, 1 user manual	1
Thermax 16/170 M12	**051293**	–	●	20 Thermax M16, 20 perforated sleeves 20 x 200, 5 bits, 5 cutting blades, 5 applicator tip extension hoses, 5 user manuals	20
Thermax 16/170 M12	–	**051543**	●	10 Thermax M16 A4, 10 perforated sleeves 20 x 200, 3 bits, 3 cutting blades, 3 applicator tip extension hoses, 3 user manuals	10
Thermax 16/170 M12 B	**051292**	–	●	2 Thermax M16, 2 perforated sleeves 20 x 200, 1 bit, 1 cutting blade, 1 applicator tip extension hose, 1 user manual	1

DUOPOWER
The duo of power and intelligence

TECHNICAL DATA

DUOPOWER

DUOPOWER with greater anchorage depth

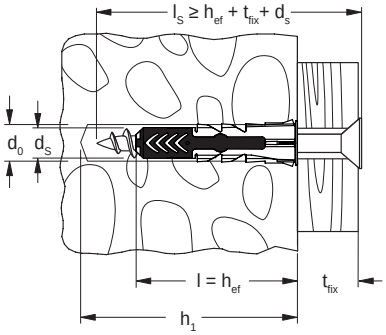

Item	Art.-No. without screw	Art.-No. with screw	Drill hole diameter d_0 [mm]	Min. drill hole depth h_1 [mm]	Min. panel thickness d_p [mm]	Min. bolt penetration $l_{E,min}$ [mm]	Anchor length l [mm]	Wood and chipboard screws d_S / d_S x l_S [mm]	Drive	Max. fixture thickness t_{fix} [mm]	Sales unit [pcs]
DUOPOWER 5 x 25	**555005**	–	5	35	12,5	29	25	3 - 4	–	–	100
DUOPOWER 6 x 30	**555006**	–	6	40	12,5	35	30	4 - 5	–	–	100
DUOPOWER 6 x 50	**538240**	–	6	60	12,5	55	50	4 - 5	–	–	100
DUOPOWER 8 x 40	**555008**	–	8	50	12,5	46	40	4,5 - 6	–	–	100
DUOPOWER 8 x 65	**538241**	–	8	75	2 x 12,5	71	65	4,5 - 6	–	–	50
DUOPOWER 10 x 50	**555010**	–	10	70	12,5	58	50	6 - 8	–	–	50
DUOPOWER 10 x 80	**538242**	–	10	100	–	88	80	6 - 8	–	–	25
DUOPOWER 12 x 60	**538243**	–	12	80	–	70	60	8 - 10	–	–	25
DUOPOWER 14 x 70	**538244**	–	14	90	–	82	70	10 - 12	–	–	20
DUOPOWER 5 x 25 S	–	**555105**	5	40	12,5	29	25	4 x 35	PZ2	6	50
DUOPOWER 6 x 30 S	–	**555106**	6	45	12,5	35	30	4,5 x 40	PZ2	5	50
DUOPOWER 6 x 50 S	–	**538245**	6	75	12,5	55	50	4,5 x 70	PZ2	15	50
DUOPOWER 8 x 40 S	–	**555108**	8	65	12,5	45	40	5 x 60	PZ2	15	50
DUOPOWER 8 x 65 S	–	**538246**	8	85	2 x 12,5	70	65	5 x 80	PZ2	10	25
DUOPOWER 10 x 50 S	–	**555110**	10	74	12,5	57	50	7 x 69	SW 13 / TX 40	13	25
DUOPOWER 10 x 80 S	–	**538247**	10	112	–	87	80	7 x 107	SW 13	20	10
DUOPOWER 12 x 60 S	–	**538248**	12	85	–	68	60	8 x 80	SW 13	12	10
DUOPOWER 14 x 70 S	–	**538249**	14	100	–	80	70	10 x 95	SW 17	15	8

Universal plug UX
The nylon plug for all building materials

TECHNICAL DATA

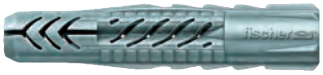

UX - without rim

UX R - with rim

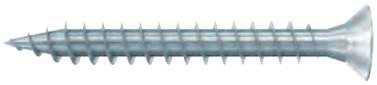

UX R S - with rim and screw

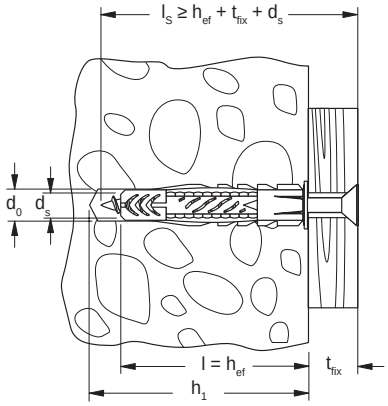

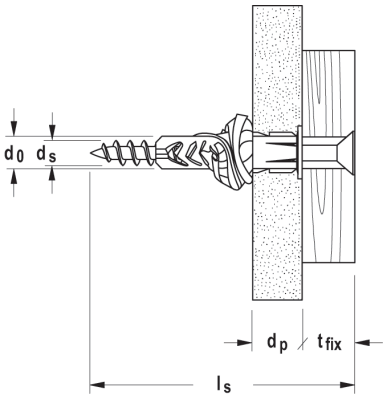

	Without rim Art.-No.	With rim Art.-No.	With rim and screw Art.-No.	Drill hole diameter d_0 [mm]	Min. drill hole depth h_1 [mm]	Min. panel thickness d_p [mm]	Anchor length l [mm]	Wood and chip-board screws d_s / d_s x l_s [mm]	Max. fixture thickness t_{fix} [mm]	Sales unit [pcs]
Item	**UX**	**UX R**	**UX R S**							
UX 5 x 30	**094721**	**094722**	–	5	40	9,5	30	3 - 4	–	100
UX 6 x 35	**062754**	**062756**	–	6	45	9,5	35	4 - 5	–	100
UX 6 x 35	–	–	**094758**	6	65	9,5	35	4,5 x 60	20	25
UX 6 x 50	**072094**	**072095**	–	6	60	9,5	50	4 - 5	–	100
UX 6 x 50	–	–	**094759**	6	80	9,5	50	4,5 x 75	20	25
UX 8 x 40	–	**505483**	–	8	50	9,5	40	4,5 - 6	–	100
UX 8 x 50	**077869**	**077870**	–	8	60	9,5	50	4,5 - 6	–	100
UX 8 x 50	–	–	**094762**	8	75	9,5	50	5 x 70	15	25
UX 8 x 50	–	–	**094760**	8	85	9,5	50	5 x 80	25	25
UX 10 x 60	**077871**	**077872**	–	10	75	12,5	60	6 - 8	–	50
UX 10 x 60	**094761** 1)	–	–	10	90	12,5	60	6 x 85	20	10
UX 12 x 70	**062758**	–	–	12	85	–	70	8 - 10	–	25
UX 14 x 75	**062757**	–	–	14	95	–	75	10 - 12	–	20

1) with screw

Expansion plug SX
The powerful nylon plug with 4-way expansion

TECHNICAL DATA

Plug **SX** with rim

Plug **SX** - with greater anchorage depth, without rim

Plug **SX S** with rim and screw

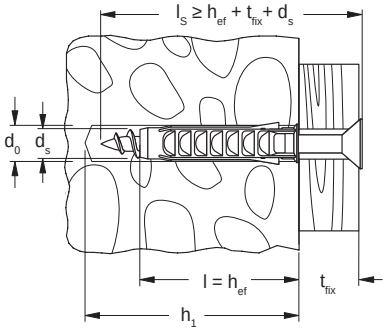

	With rim	With greater anchorage depth, without rim	With rim and screw	Drill hole diameter	Min. drill hole depth	Anchor length	Wood and chip-board screws	Max. fixture thickness	Sales unit
				d_0	h_1	l	d_s / d_s x l_s	t_{fix}	
	Art.-No.	Art.-No.	Art.-No.	[mm]	[mm]	[mm]	[mm]	[mm]	[pcs]
Item	**SX**	**SX**	**SX S**						
SX 4 x 20	**070004**	–	–	4	25	20	2 - 3	–	200
SX 5 x 25	**070005**	–	–	5	35	25	3 - 4	–	100
SX 6 x 30	**070006**	–	–	6	40	30	4 - 5	–	100
SX 6 x 30	–	–	**070021**	6	45	30	4,5 x 40	5	50
SX 6 x 50	**078185**	**024827**	–	6	60	50	4 - 5	–	100
SX 8 x 40	**070008**	–	–	8	50	40	4,5 - 6	–	100
SX 8 x 40	–	–	**070022**	8	65	40	5 x 60	15	50
SX 8 x 65	–	**024828**	–	8	75	65	4,5 - 6	–	50
SX 10 x 50	**070010**	–	–	10	70	50	6 - 8	–	50
SX 10 x 80	–	**024829**	–	10	95	80	6 - 8	–	25
SX 12 x 60	**070012**	–	–	12	80	60	8 - 10	–	25
SX 14 x 70	**070014**	–	–	14	90	70	10 - 12	–	20
SX 16 x 80	**070016**	–	–	16	100	80	12 (1/2")	–	10

One-component gun foam
The gun foam with proven joint sound insulation

TECHNICAL DATA

Item	Art.-No.	Content per can [ml]	Max. foam yield (free foaming) [l]	Colour	Sales unit [pcs]
PUP 750 B3 (EN)	**058501**	750	41	beige	12
PUP 750 B3 GunGrade (EN/FR)	**098012**	750	41	beige	12

2-component premium rapid foam
The high-quality 2-component rapid foam for fast and secure fixation with optimized activation system

TECHNICAL DATA

Item	Art.-No.	Content per can [ml]	Max. foam yield (free foaming) [l]	Sales unit [pcs]
2K PU 400 PLUS	**546322**	400	10	12

1-component fast bonding foam
The high-quality rapid installation foam with resistance of water pressure for professionals

TECHNICAL DATA

Item	Art.-No.	Content per can [ml]	Max. foam yield (free foaming) [l]	Colour	Sales unit [pcs]
PU 1/750 B3 HandHeld (EN/FR)	**098011**	750	41	beige	12
PU 750 B3 (EN/FR/AR)	**050427**	750	41	beige	12

Premium sanitary silicone DSSA
The high-quality premium sanitary silicone

TECHNICAL DATA

Item		Colour	Contents [ml]	Sales unit [pcs]
DSSA TP (DE/EN)	053100	transparent	310	12
DSSA W (DE/EN)	053101	white	310	12
DSSA GR (DE/EN)	053102	grey	310	12
DSSA BG (DE/EN)	053103	bahama beige	310	12
DSSA DG (DE/EN)	053105	dark grey	310	12
DSSA SW (DE/EN)	053120	black	310	12
DSSA SG (DE/EN)	058530	silver grey	310	12
DSSA FUG (DE/EN)	512208	joint grey	310	12
DSSA SAG (DE/EN)	512209	sanitary grey	310	12
DSSA MA (DE/EN)	512210	manhattan	310	12
DSSA AN (DE/EN)	512211	anthracite	310	12

Premium construction silicone DBSA
The low-odour premium construction silicone with high adhesive spectrum for metal processors

TECHNICAL DATA

Item		Colour	Contents [ml]	Sales unit [pcs]
DBSA TP (DE/EN)	053090	transparent	310	12
DBSA W (DE/EN)	053091	white	310	12
DBSA GR (DE/EN)	053092	concrete grey	310	12
DBSA SW (DE/EN)	053094	black	310	12
DBSA ANG (DE/EN)	540084	anthracite	310	12

Construction sealant Premium DKM
The universal hybrid sealant/adhesive for indoor and outdoor use and HVAC systems

TECHNICAL DATA

Item		Colour	Contents [ml]	Sales unit [pcs]
DKM-290 ML white (DE/EN)	517598	white	290	12
DKM-290 ML grey (DE/EN)	517599	grey	290	12
DKM-290 ML black (DE/EN)	517600	black	290	12
DKM-290 ML transparent (DE/EN)	533830	crystal clear	290	12

Premium all-weather sealant DDK
The permanently elastic joint sealant with a strong hold on all substrates

TECHNICAL DATA

Item		Colour	Contents [ml]	Sales unit [pcs]
DDK TR (DE/EN)	**049103**	transparent	310	12

Flexible power adhesive premium HTM
Flexible high-performance adhesive with really high initial adhesion to many absorbent and non-absorbent substrates

TECHNICAL DATA

Item	Art.-No.	Contents [ml]	Type of packaging	Colour	Sales unit [pcs]
HTM WH 290 (DE/EN)	**541712**	290	Cartridge	white	12

Zinc Spray FTC-ZS / Zinc Spray bright grade FTC-ZA
Fast-drying surface and corrosion protection with outstanding long-term effect for metals. FTC-ZA is ideal for repairing damaged zinc coatings with colour-matched corrosion protection (RAL 9006).

TECHNICAL DATA

FTC-ZS

FTC-ZA

Item	Art.-No.	Contents [ml]	Sales unit [pcs]
FTC-ZS (EN/FR/ES/PT)	**509242**	400	12
FTC-ZA (EN/FR/ES/PT)	**509241**	400	12

Accessories

TECHNICAL DATA

PUPM 3

PUPM 4 BLACK

Item	Art.-No.		Sales unit [pcs]
PUP M3	**033208**		1
PUP M4 BLACK	**513429**		1

TECHNICAL DATA

Item	Art.-No.	Contents [ml]	Sales unit [pcs]
PUR 500 (DE/EN)	**053085**	500	12

TECHNICAL DATA

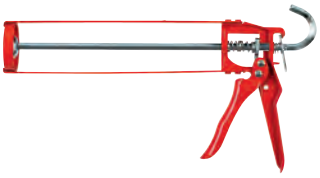

Skeleton dispenser **KP M1**

Dispenser **KP M3**

Dispenser **FIS DM S**

Item	Art.-No.		Sales unit [pcs]
KP M1	**053115**		1
KP M3	**541441**		1
FIS DM S	**511118**		1

TECHNICAL DATA

Pneumatic dispenser **FIS DP S-XL**

Dispenser **FIS DM S-L**

Dispenser **FIS AC**

Item	Art.-No.		Sales unit [pcs]
FIS DP S-XL	**512401**		1
FIS DM S-L	**510992**		1
FIS AC	**096497**		1

TECHNICAL DATA

Blow-out pump **AB G**

Item	Art.-No.		Sales unit [pcs]
Blow-out pump AB G	**089300**		1

ACCESSORIES DRILL HOLE CLEANING

Cleaning brush **BS**

Item	Art.-No.	Brush diameter [mm]	For drill diameter [mm]	Sales unit [pcs]
BS ø 8	**078177**	9	8	1
BS ø 10	**078178**	11	10	1
BS ø 12	**078179**	13	12	1
BS ø 14	**078180**	16	14	1
BS ø 16/18	**078181**	20	16/18	1
BS ø 24	**078182**	26	24	1
BS ø 28	**078183**	30	28	1
BS ø 35	**078184**	40	30/32/35	1

fischer
innovative solutions

9 Fire protection systems FireStop

		Page
Intumescent acoustic mastic FiAM		340
Fire collar FFC		342
Cable coating FCC		344
Foam barrier system PLUS		346

Flexible fire resistant acoustic mastic

Construction joints

Non combustible services

BUILDING MATERIALS

- Flexible wall constructions
- Rigid floor and wall constructions
- Masonry
- Concrete
- Timber
- Steel
- FCPS System

ASSESSMENT/APPROVAL

CE
ETA-14/0378
ETA-14/0379
1121-CPR-JA5044

British Standard
BS 476 - 20
BS EN ISO 10140-3:1995
BS EN 1026
BS EN 1366-4
BS EN 1366-3

warrington certifire certification
Approved CF 5034

CLASSIFIED c UL us
FILL VOID OR CAVITY MATERIAL FOR USE IN THROUGH PENETRATIONS FIRE STOP SYSTEMS SEE UL FIRE RESISTANCE DIRECTORY 4NE5

UL EU

ADVANTAGES

- Water based
- Low VOC
- Movement capability ± 25 %
- Excellent acoustic properties
- Approved for infinite linear gap length
- Halogen and solvent free
- Paintable and excellent slump characteristics

APPLICATIONS

- Metallic pipes: 6″ (159 mm)
- Cable trays: 18″ x 2″ (450 x 50 mm)
- Cable bunches: 3″ (80 mm)
- Linear joints: flexible and rigid construction elements
- Joints between FCPS coated panel system

FUNCTIONING

- FiAM is a one-part water-based acrylic emulsion.
- It has a fire resistance of up to 5 hours when used in construction joints and services in both vertical and horizontal applications.
- When exposed to fire, it reacts to form a highly insulative char that slows down heat transfer and provides a barrier to fire seal.
- It is suitably compatible in a variety of materials, and is utilised within the FCPS which is designed to seal large openings in fire rated floors and walls.

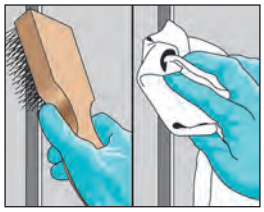
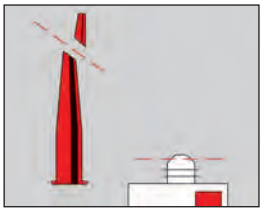
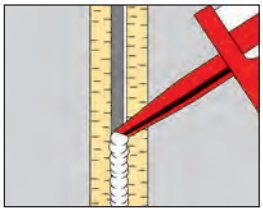
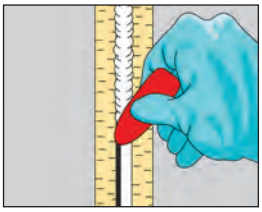
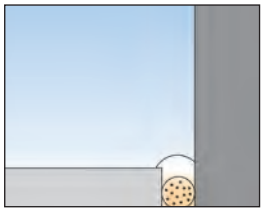

INSTALLATION

1. Clean all surfaces free from loose debris and contaminants and install required backing material.
2. Apply FiAM to required parameters as per approved system, making sure that it is in contact with all surfaces to provide maximum adhesion.
3. Tool sealant to a defect-free finish using a wetted trowel or putty knife.

SPECIFICATIONS

Item	Art.-No.	Languages on the cartridge	Contents [ml]	Suitable for use with	Sales unit [pcs]
FiAM 310 (DE,FR,EN,NL)	**053011**	DE, FR, EN, NL	310	–	25
FiAM 310 (DK,FI,SE,NO)	**538152**	DK, FI, SE, NO	310	–	25
FiAM 310 (TR,PT,ES,IT)	**538150**	TR, PT, ES, IT	310	–	25
FiAM 310 (PL,SK,CZ,HU)	**538151**	PL, SK, CZ, HU	310	–	25
FiAM 600	**056006**	–	600	–	25
KP M2	**053117**	–	–	FiAM 310, FFRS 310, UFS 310, FiGM 310	1
Applicator gun 600 ml	**097967**	–	–	FiAM 600	1

All items are available in grey and are subject to minimum order requirement.

TECHNICAL DATA

Chemical base	Water-based acrylic
Relative gravity	Approx 1.6 g/cm3
Skin-forming time	Approx 10 minutes at 23 °C RH
Curing rate	Approx 1.5 mm per 24 hours*
Storage temperature	+5 °C to +25 °C
Movement capability	± 25 %
Slump	Nil up to 30 mm
Shelf-life	18 months (under recommended conditions)
pH Value	08.09.2005
Sound transmission class	63 dB
Yield per l/m	1.55 yield per linear metre
Colour	White, grey
European Technical Approval	ETA 14-0378, ETA 14-0379
CE marking	1121-CPR-JA5044

* Curing rate is dependent on substrate, air humidity and weather conditions.

APPLICATION DATA

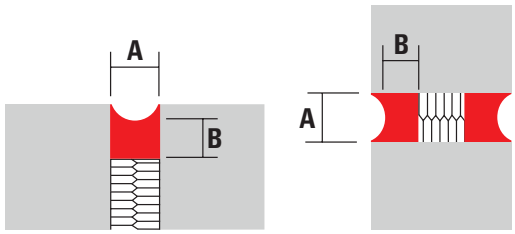

Joint width A [mm]	Joint depth B [mm]	Yield per linear metres
30	20	0.5
20	15	1
15	8	1.25
10	10	3
6	6	4.25

Substrate	Max. joint width [mm]	Fire ratings	
		Integrity rating [minutes]	Insulation rating [minutes]
Concrete/concrete	60	240	240
Brick/concrete	25	240	30
Steel/blockwork	50	300	90
Hardwood/blockwork	50	60	60
Softwood/blockwork	25	30	30
Drywall/concrete/head detail	20	120	120

Service type size		Fire ratings	
		Integrity rating [minutes]	Insulation rating [minutes]
Copper/steel/metal pipes	14 - 159 mm diam.	Up to 120	Up to 90
Loaded cable tray	450 x 50 (tray) cables to 21 mm	Up to 120	Up to 90
Single/bunched cables	30 - 80 mm diam. cables	Up to 90	Up to 90

* Copper, steel and metal pipes with an insulation rating of up to 90 minutes are in conjunction with the Thermal Defense Wrap (TDW).

Collar for sealing a wide range of combustible pipes where passing through fire rated walls and floors

Floor application

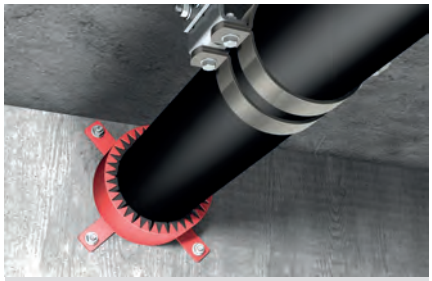

Wall applications

BUILDING MATERIALS

- Flexible and rigid wall constructions
- Solid concrete floors
- Hollow precast floors

ASSESSMENT/APPROVAL

ETA-15/0696
1121-CPR-JA5094

British Standard
BS 476 - 20
BS EN 1366-3

UL EU

ADVANTAGES

- Easy retrofit at any time
- Water resistant
- No minimum annular service required
- Pre-fixed attachment lugs
- Fold back tag for secure fixture around pipe

APPLICATIONS

- Non-metallic pipes: like PVC, HDPE, MDPE, ABS of various sizes through fire rated walls and floor assemblies

FUNCTIONING

- FFC is a powder coated cylindrical steel sleeve, which contains a heat reactive graphite-based intumescent material that expands during fire.
- Designed to be securely fitted around the pipe and held in position with a retaining bolt.
- Any gaps up to 10 mm around FFC should be backfilled with FiAM or larger annular space should be closed with FCPS or FFSC.

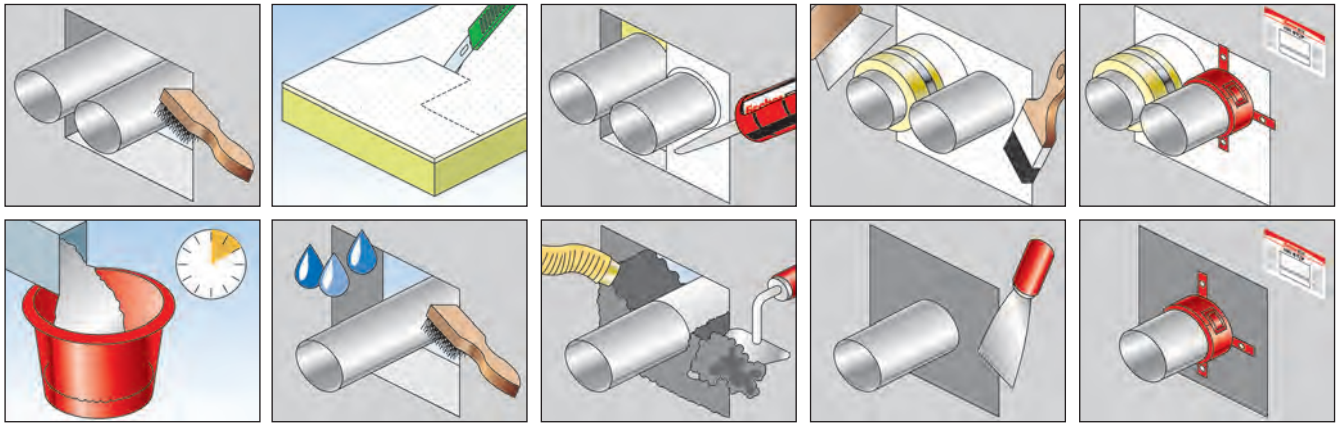

INSTALLATION

1. Clean all contact surfaces so they are free from loose debris and contaminants.
2. Ensure services are sufficiently supported as per approved system or local building codes.
3. Close the annular space as per requirement with FiAM, FCPS or FFSC and choose the correct size of FFC in accordance with the pipe diameter.
4. Open the toggle clip, place FFC around the pipe with its fixing lugs pointing towards the building element.
5. Lock the toggle clip and push it tightly against the surface of building element.
6. Attach the collar to the building element through the mounting lugs with a minimum anchoring depth of 32 mm and minimum 8 mm diameter fixing (please refer to fischer fire rated fixing section for correct anchor).
7. For vertical applications, repeat installation on both sides as per the instruction in the approved system.

SPECIFICATIONS

Item	Art.-No.	Dimensions [mm / inch]	Sales unit [pcs]
FFC 2/30-32	**052456**	30 - 32	32
FFC 2/38-40	**052480**	38 - 40	32
FFC 2/55	**052481**	55	100
FFC 2/63	**052482**	63	50
FFC 2/75	**052483**	75	50
FFC 2/82	**052486**	82	50
FFC 2/90	**052487**	90	40
FFC 2/110	**052488**	110	40
FFC 2/125	**052489**	125	25
FFC 2/160	**052500**	160	10
FFC 2/200	**052501**	200	10

Details on larger sizes up to 400 mm and 4 hours fire rated collars are available on request.
Smaller sales units available on request.

TECHNICAL DATA

State	Solid
Colour	Red sleeve with black inner component
Odour	Odourless
Fire rating	Up to 4 hours
Available sizes	> 30 mm and max up to 200 mm
Significant expansion occurs at temperature	> 180 °C
Storage temperature	N/a
Shelf life	N/a

Cable coating FCC

Ablative firestop coating design to prevent the propagation of fire along internal and external electrical cable

Cable assignment through wall

Application of FCC coating

BUILDING MATERIALS

- Drywall
- Concrete
- Masonry

ASSESSMENT/APPROVAL

FM APPROVED

IEC 60331-21: 1999

EN 60332-3-22: 2010

EN 60332-1-2: 2004

ADVANTAGES

- Water based, odorless and solvent free
- Suitable for internal and external applications
- Quick curing
- Spray or brush applied
- Halogen, fibres and asbestos free
- High yield

APPLICATIONS

- Power plants (IEC 332 Pt3)
- Telecommunication
- Industrial plants
- Petrochemical plants
- Factories and production facilities

FUNCTIONING

- Can be sprayed, painted, or brush applied.
- Multiple layers and overhead application possible due to its thixotropic consistency.
- Base surface should be clean, dry and suitably prepared.
- Thickness of application: see approval or test.
- When exposed to fire, it reacts to form a highly isolative char that slows down heat transfer, and provides a protective fire barrier.
  When spray applied:
  Min. 170 bar
  Nozzle spray angle 40°
  Flow rate 0,78 mm
  Liters/minute 3,5

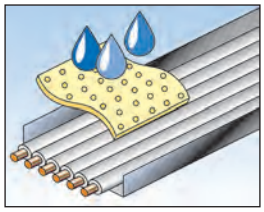

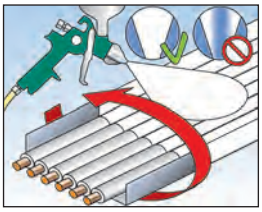

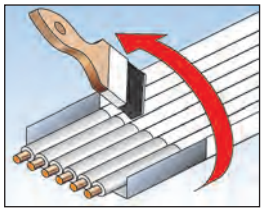

SPECIFICATIONS

Item	Art.-No.	Contents [l]	Sales unit [pcs]
FCC	**539609**	12,5	1

TECHNICAL DATA

Chemical base	Water-based
Density	1,55 g/cm³
Application temperature	+ 5 °C to + 40 °C
Storage temperature	+5 °C to +30 °C to be protected from frost and direct sunlight
Odour	slight
Water resistant	yes
Shelf life	1 year
pH Value	approx. 8
Coating thickness	0.5 - 0.8 mm (IEC 60332-3)
(Dry film)	1.6 mm (Factory Mutual)
Colour	White
Curing time at room temperature	1 - 3 days*

* Depending on humidity, air and ambiant temperature.

FireStop Foam and FireStop Block for use in a System. Or individually. ETA approved and UL listed applications.

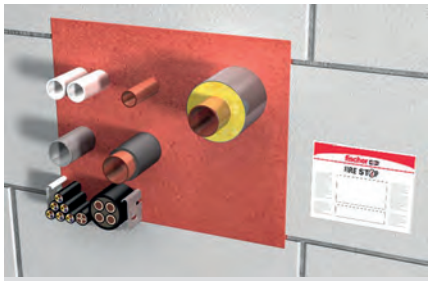

Mixed penetrations through wall or floor assembly

Cable tray through wall or floor assembly

BUILDING MATERIALS

- Concrete (wall and floors)
- Masonry
- Flexible wall

ASSESSMENT/APPROVAL

CE

CLASSIFIED c UL us
FILL VOID OR CAVITY MATERIAL FOR USE IN THROUGH PENETRATIONS FIRE STOP SYSTEMS SEE UL FIRE RESISTANCE DIRECTORY 4NE5

EN 1366-3: 2004

EN 13501-1

American Standard

ASTM E 814 (UL 1479)

ASTM E 84 (UL 723)

ADVANTAGES

- Easy access for difficult to reach openings
- Low VOC
- Various applications with two products only
- Age resistant
- Smoke resistant
- Resistant to damp
- Re-enterable and repairable
- Excellent adhesion
- No backing material required
- F-rating / E-rating up to 2 hours
- T-rating / I-rating up to 2 hours

APPLICATIONS

- Metallic pipes up to 8 in. (203 mm)
- Insulated metallic pipes
- Conduits
- Cable and cable bunches
- Cable trays
- Mixed multiple penetrations

FUNCTIONING

- **FBS** is a two component polyurethane expanding sound, smoke and firestopping seal for hard to reach locations which expands to up to 5 times of its volume.
- **FBB** are highly elastic mouldable blocks.
- **FIB** is a glass fiber reinforced intumescent wrap to enhance the insulation value of ETA applications.
- Tested in accordance with ASTM E 814 (UL 1479), ASTM E84 (UL 723) as well as EN 1366-3, EN 13501 the Barrier System PLUS allows an easy application which saves time and costs on site.

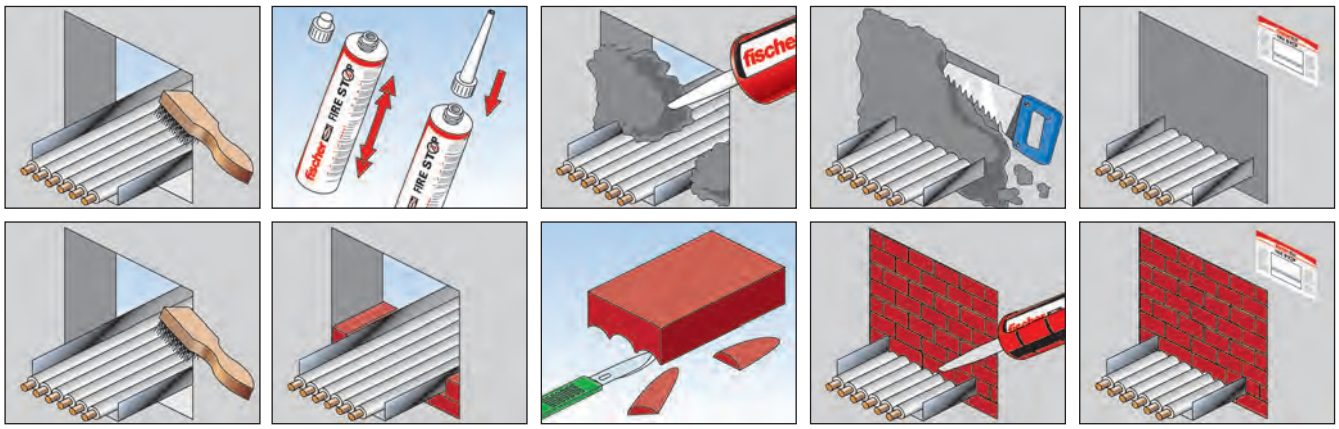

fischer innovative solutions

INSTALLATION

1. Clean all contact surfaces so they are free from loose debris and contaminants.
2. Install the required backing material as per the detailed instruction or approved system.
3. Unscrew cap from cartridge and insert into the dispensing gun.
4. Discard non-uniform initial material.
5. Fill the opening from back to front. Build up the foam from bottom to top.
6. After 2 minutes, tool foam to a defect-free finish using a suitable knife.
7. Cables or pipes that will be installed retroactively can be routed through the existing foam. Refill gaps due to removed cables or pipes with FBS foam.

SPECIFICATIONS

Item	Art.-No.	Contents [ml]	Dimensions [mm]	Sales unit [pcs]
FBS-UL	**544079**	380	–	6
FBB-UL FireStop Block	**544083**	–	200 mm x 130 mm x 60 mm	12
FBS-EN (DE, FR, EN, IT)	**544084**	380	–	6
FBS-EN (DK, FI, SE, NO)	**544085**	380	–	6
FBS-EN (PL, SK, CZ, HU)	**544086**	380	–	6
FBS-EN (TR, PT, ES, NL)	**544087**	380	–	6
FBB-EN FireStop Block	**544088**	–	200 mm x 144 mm x 60 mm	4
FIB Insulating Bandage	**544089**	–	5000 mm x 150 mm	1
FFBD Foam Barrier Dispenser	**544090**	–	–	1

TECHNICAL DATA

Criteria	FBS-UL	FBS-EN	FBB-UL	FBB-EN
Density		≥ 215 kg/m³		240 kg/m³ to 300 kg/m³
Temperature resistance	≤ 80 °C	≤ 80 °C	≤ 80 °C	≤ 80 °C
Construction material class		B2 - as per DIN 4102		B2 - as per DIN 4102
Cartridge content	380 ml	380 ml		
Yield	≤ 1.9 l	≤ 2.1 l		
Cure time	Approx. 90 s	Approx. 90 s		
Colour	Red-brown	Red-brown	Red-brown	Red-brown
Pack size	Boxed in 6	Boxed in 6	Boxed in 4	Boxed in 18
Shelf life	12 months from date of manufacturing	12 months from date of manufacturing		
Storage Temperature	+5 °C to +30 °C	+5 °C to +30 °C		
Sound Transmission Class		43.5 dB - 66 dB		45.5 dB - 68 dB
Application Temp Range	+15 °C to +30 °C	+15 °C to +30 °C		

APPLICATION DATA - UL

	Blank Opening	Metallic Pipes and Conduits	Cables / Cable Trays	Insulated Metal Pipes	Mixed Penetrations
Max. possible sizes of penetrants	Max 32 in. x 32 in. (813 x 813 mm)	Max 8 in. (203 mm) diameter	Max 24 in. (610 mm) wide by max 6 in. (152 mm) deep cable tray	Max 8 in. (203 mm) diameter with 1 in. (25 mm) insulation	See listed system
Barrier System PLUS UL	C-AJ-0158, W-L-0052	C-AJ-1669	C-AJ-3341; C-AJ-4110; W-L-4091	C-AJ-5383	C-AJ-8260; C-AJ-8261

APPLICATION DATA - ETA

		Seal thickness 144 mm	Seal thickness 200 mm
Cable / Cable Trays and Ladders	Sheated electrical cables up to 80 mm	Wall: E120 / EI60 - Floor: EI60	Wall / Floor: E120 / EI90
	Tied cable bundles up to 100mm		
	Non-sheated electrical cables	Wall: E120 / EI45 - Floor: E60 / EI30	Wall/ Floor E120 / EI60
Condiuts	Conduits / pipes of plastic up to a max. diameter of 40 mm	Wall: E120 / EI60 - Floor: E60 / EI30	Wall / Floor EI120
Pipes	Insulated metal pipes with max. diameter of 54 mm	Wall: E120 / EI90 - Floor: EI60	Wall / Floor E120 / EI90
	Non-insulated metal pipes with max. diameter of 28 mm	Wall: E120 / EI60 - Floor: EI60	Wall / Floor E120 / EI90
	Insulated metal pipes with AF/Armaflex insulation up to 88.9 mm diameter	Wall: E120 / EI90 - Floor: EI60	Wall / Floor EI120
	Combustible pipes with max. 50 mm diameter	Wall: EI120 - Floor: EI60	Wall / Floor EI120
For detailled information please refer to ETA 17/0845. Remaining space around penetrants can be filled with FBB FireStop Block.			

fischer
innovative solutions

Basic knowledge Installation Systems

Contents

Maintenance groups for mounting pipe installations	350
Product solutions with examples	350
Elongation	352
Soundproofing	353
Corrosion protection	354
Fire protection	356
Mounting sprinkler systems	359
Mounting gas pipe	360
Seismic and dynamic	361
Dimension and weights of pipes	362
Important dimensions, variables and units	366
Approvals, markings and their importance	368

Maintenance groups and applications for mounting pipe installations

The mounting of pipe installations, distribution systems and devices in various types of buildings, as well as industrial plants and processes are combined under the umbrella term, installation systems. fischer Installation Systems is a complete range including the relevant supplementary products, in particular plugs and anchors.

The following belong to the maintenance groups which install pipes:

- Heating, ventilation and cooling systems
- Plumbing
- Sprinklers - extinguishing systems
- Electrical installations (medium and low voltage)
- Water and waste water treatment
- Energy and water supply

Through these maintenance groups, different pipe installations, which are offered by the Installation Systems product range, are created:

- Heating and cooling pipes
- Steam pipes
- Ventilation ducts and ventilation pipes
- Drinking water and service water pipes
- Waste water and drainage water pipes
- Sprinkler pipes
- Gas and compressed air pipes
- Medical gas supply
- Process pipes for gases and liquids
- Water and waste water treatment
- Energy and water supply

Product solutions with examples

Installation shaft with FUS channel system
Through the distinctive interlocking of the channels for the channel nuts FCN Clix P or PFCN, the FUS channel system provides a secure grip for handling high shear loads.

Also the first choice for pipe line routes due to the greater stability.

Cantilevers for different load ranges
With centred load (load case 1), the load range of the brackets is between 0.33 kN (33 kg) and 7.5 kN (750 kg).

Lightweight cantilevers in the FLS system: ALK
Medium cantilevers in the FUS system: FCA
Massive cantilevers in the FUS system: FCAM

Product solutions with examples

Pre-assembled construction element
The pre-assembled conctruction elements MW Clix 90° und SF Clix 31 guarentee for a time saving installation.

The time saving in comparison to usual U-profile file system is around 70%.

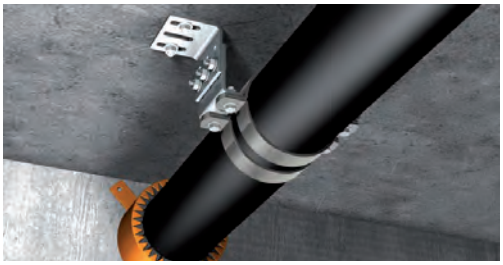

Fix points and sliding components
Sound insulation requirements for fix points: FSFP anchor point
For all standard cases: FFPS fix point with FFPK Fixing ensures controlled movement in one direction: Sliding elements (see instructions on this under Elongation).

See chapter on anchors and sliding elements.

Refrigerant pipe clamp with integrated steel bracket
Different requirements for insulating layer thicknesses and the prevention of condensation are the basic requirements for a refrigerant pipe clamp.

The KFT refrigerant pipe clamp allows neat bonding for insulating layer thicknesses of up to 30 mm, 40 mm or 60 mm.

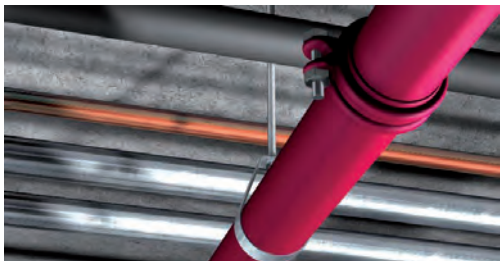

Sprinkler loop with VdS and FM approval
Sprinkler systems are created according to the requirements of property insurers. The association of property insurers, VdS and FM global, testing products and give approvals for installation in water extinguishing systems.The FRSL and FRSP sprinkler clamp are approved sprinkler loops.

See also Mounting sprinkler installations.

Channel connection - which loads are relevant?
In the design of supports or similar components for mounting pipe installations, the load of the connecting element, such as a hammer-head screw (e.g. FHS Clix S) or channel nut (e.g. FCN Clix P) is decisive for the connection with a angle bracket, for example. The load information is shown for one element, but can be doubled when using two elements. (see example left side).

Elongation

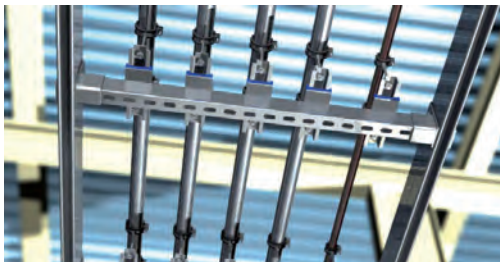

Materials expand with heat. For long components, the change in length is mainly considered. So it is not always a matter of expansion. Shrinkage upon cooling is to also be included in the calculation. This is important when installing pipes. Within piping, the change in length is to be specifically steered. Not doing this during installation results not only in pipe defects, but also in serious damage to components. It is therefore essential to determine how great the change in the length of a pipe can be.
For this purpose, the pipe length and the expansion coefficient of the pipe material, as well as the expected temperature difference, must be known. This is to be determined such that not only the normal operating temperatures, but also the maximum temperatures that can arise in a case of malfunction, are taken into account. The range is therefore from around 10 °C assembly temperature up to 95°C service temperature for water filled systems.

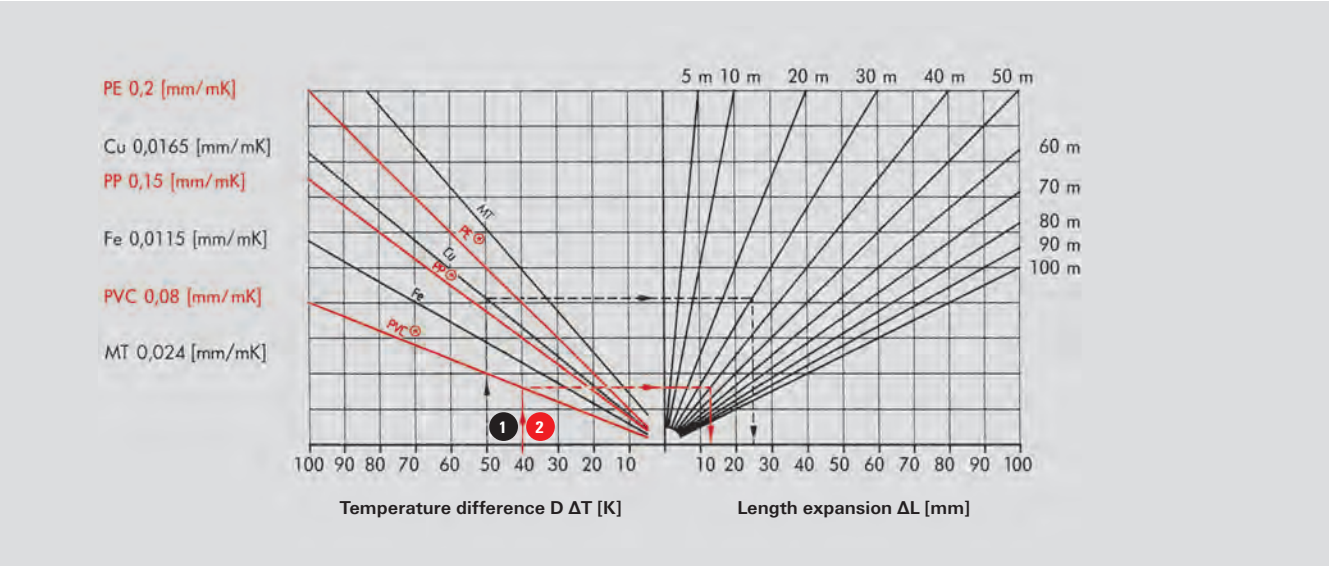

NOTE: For plastic pipes (PE, PP, PVC), the length expansionread from the diagram is to be multiplied by a factor of 10.

Example:

1. Copper pipe, Cu – Length of pipe span 30 m
   Temperature difference △T = 50 K
   Length expansion △ L= 24,75 mm

2. PVC pipe – Length of pipe span L = 40 m
   Temperature difference △ T = 40 K
   Length expansion △ L = 128 mm (table value x10)

Length expansion calculation formula

$$\Delta L = L \times \Delta T \times \alpha$$

[mm] [m] [K] [mm/m K]

△ L = Change in length
L = Length of the pipe span/section
△ T = Temperature difference
α = Length expansion coefficient

Soundproofing

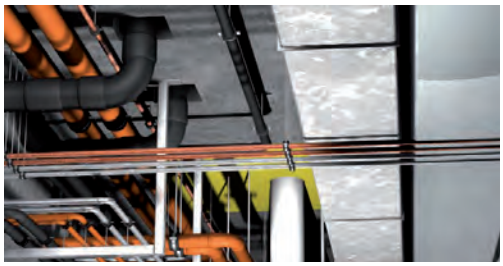

As defined in the appropriate standards, the goal of soundproofing is to reduce the transmission to other apartments or usage areas to a given noise range. The upper limits for permissible residual noise levels are defined in the standards.

Soundproofing - VDI 4100

In principle, the VDI 4100 values are, among other things, protection against noise from building systems that are mounted in the neighbouring area. According to VDI 4100, living areas are rooms that are in need of protection; in apartments, these are all rooms with a floor space of > 8m2. This includes kitchens, bathrooms, toilets, hallways and ancillary rooms. VDI 4100 further recommends agreeing with the contracted companies the sound insulation values SSt EB I = 35 dB or SSt EB II = 30 dB for noise emerging from one's own area. Exceptions to this are all sounds that are influenced by the residents, i.e. self-installed air conditioners in the apartment or noises from flushing toilets, etc.

Soundproofing - DIN 4109

The DIN 4109 from 2016-07 still supplemented by A1 (2001-01), in which the permissible sound pressure level in living and sleeping areas for noise from building installations was reduced from 35 to 30 dB(A). The standard is not applicable to the protection against noise from building installations in one's own living area, but only to sounds coming from "external" areas as defined in VDI4100. For increased sound insulation, DIN 4109 Addendum 2 (from 1989) specifies a reduction in the permissible values by 5 dB(A) (to 25 dB(A)) as effective for noises from building installations.

Soundproofing - important influential factors for pipe mounting

Sound propagates in vibrations. These sound waves can propagate in solid, liquid and gaseous media, where the speed of this sound propagation differs greatly in the various media. So the sound in pipe installations is primarily forwarded through the pipeline itself and not through the carried medium. Transmission over the metal pipe is faster than in water, for example. In welded heating systems, for example, the individual sounds of striking a pipe can propagate throughout the entire building. The sound waves are transmitted in a medium in that the molecules constantly jolt one another, thereby transmitting the wave. Steel pipes or metallic mounting elements have an ordered metallic lattice, wherein forwarding is faster and with less loss than in amorphous materials, such as rubber (general elastomers). It can thus be determined that an inversely proportional relationship exists between the speed of sound [symbol; c] and the insulating behaviour of materials. That is, materials with a low sound speed always have better insulating properties than materials with a high sound speed (steel c = 5100 m/s). Rubber (c ~40 m/s) is therefore eminently suitable for sound insulation.
In rubber, the sound waves stop dead, so to speak, wherein the energy is converted into heat.

Therefore, the sound isolation must in principle occur between the pipes and the structure. Here, we recommend the installation of a sound insulating element as close to the sound source as possible; in the simplest case, with an insulating insert in the pipe clamp itself. Sound tested pipe clamps by fischer FRS Plus pipe clamp, FRS pipe clamp and FRS-L Universal pipe clamp.

Corrosion protection

In most cases , pipes and supply lines are installed in dry rooms. Therefore, in addition to corrosion resistant materials, such as plastics or stainless steel and copper, the steel products used for installation systems are galvanised. A zinc coating thickness of 5-8 µm by means of electrolytic process (galvanising) is standard.

For mounting rails, Sendzimir galvanised material is mainly used. Sendzimir galvanising is a method in which the material is drawn through a molten zinc bath, thereby achieving a zinc layer thickness of 12-20 µm. This method is used when there is no more welding for the subsequent processing. This is the case for mounting rails because they are cold-formed after galvanising.

By cutting and stamping the holes, the surface in this area is not completely covered by a protective layer. Punched mounting rails are therefore only recommended for the dry interior rooms.

For cantilever brackets, non-galvanised channel pieces are used which are welded to the base plate. Following completion, the entire component is galvanised, creating a zinc coating thickness of 5-8 µm.

Threaded parts are either galvanised or made of stainless steel. Hot dip galvanising is less suitable for this because the large zinc layer thickness of 40-150 µm severely impairs the thread engagement.

If installation systems are installed outdoors or in wet interior rooms, they must be made of either hot dip galvanised steel or stainless steel.

Hot dip galvanising is very well suited to the protection of steel. The corrosion process is thus 10 times slower than with galvanising. The zinc loss depends on the surrounding atmosphere and humidity. An annual zinc reduction of 1 - 10 µm can, however, be assumed. The layer thickness is therefore crucial to the durability of the material.

Crucial here are the environmental influences under which the systems are installed. An overview of the expected impact on the protective action can be seen in the following diagram and tables.

Hot-dip galvanized steel

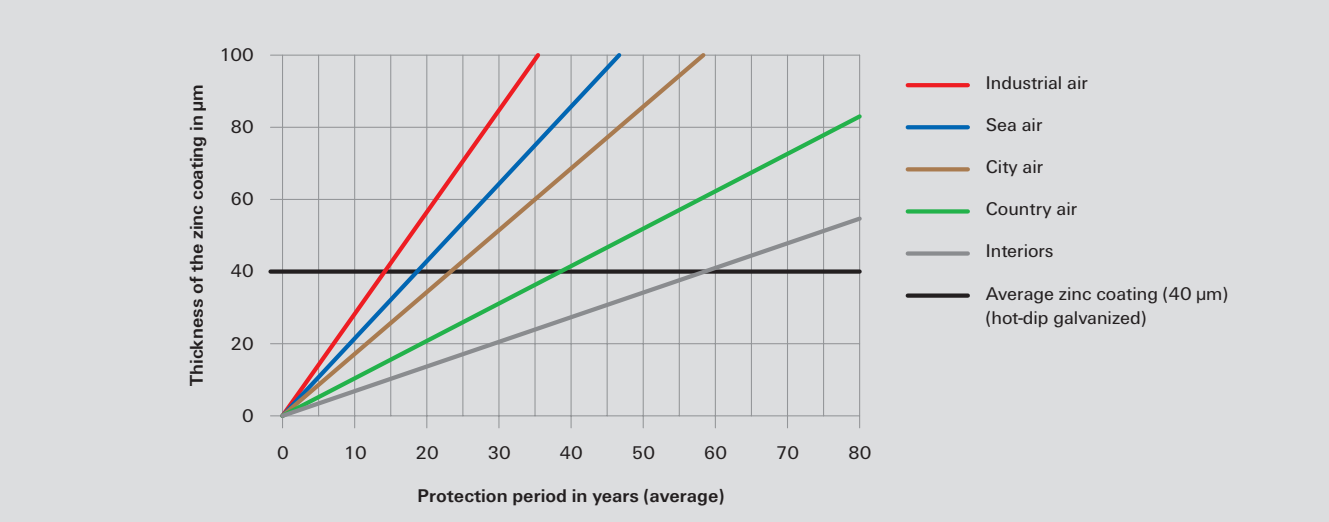

Stainless steel

Steel Grade				Designation of the Steel Group with	Corrosion	
Material No.	Short Name	AISI	UNS		Resistance Class	Exposure and Typical Applications
1.4305	X8CrNiS18-9	303	S 30300	A1	I / light	Indoor climate except damp location.
1.4301	X5CrNi18-10	304	S 30400	A2	II / moderate	Accessible constructions without nameable content of chlorides or sulfur dioxide, except industrial atmosphere.
1.4307	X2CrNi 18-9	304L	S 30403	A2L		
1.4362	X2CrNiN23-4	324	S32304	A4	III / medium	Constructions with moderate chloride and sulfur dioxide exposure and inaccessible constructions.
1.4401	X5CrNiMo17-12-2	316	S 31600			
1.4404	X2CrNiMo17-12-2	316 L	S 31603	A4L		
1.4571	X6CrNiMoTi17-12-2	316 Ti	S 31635	A5		
1.4529	X1NiCrMoCuN25-20-7	-	N 08926	1.4529	IV / strong	High corrosion exposure due to chlorine, chloride and/or sulfur dioxide, high humidity as well as accumulation of hazardous substances.

Fire protection

Fire protection in pipe installations according to the latest standards

- Fire-proof installations for individual pipes and pipe routes from R30 - R120 or F30 to F120.
- Proof of compliance with the criteria of MLAR (German standard pipe system directive) for installation in escape and rescue routes

Fire protection - protection goals

Firstly, fire protection serves to protect people, and is regulated by the building laws in the respective countries (or regional states). Secondly, fire protection serves to protect property and this is regulated by the insurance associations, such as VdS and FM. These requirements partially go beyond the building legislation. This is particularly evident in the installation of fire protection systems, such as sprinklers, etc., as approved or recognised components must be used here. (See the following section for further details on this)

Fire inspection reports for the mounting of pipe clamps and mounting rails

Fire safety inspection reports meet the requirements for fire protection according to the building regulations of the countries and, especially for Germany, according to the nationwide homonymic German pipe systems directive (LAR), based on the standard pipe systems directive of 2005 (MLAR 2005). Personal protection is defined in the MLAR Directive through clear rules for escape routes, such as corridors, stairwells and hallways between stairwells and the exit.

The key message is to ensure the safety of the escape route by ensuring the functioning of the fire-proof sub-ceiling. To this end, compliance with the minimum distance of min a ≤ 50 mm according to MLAR is required between installations and underlying suspended fire-proof F30 sub-ceilings (fire resistance of 30 minutes). Based on the fire inspections, load information for a fire resistance of 30 minutes in relation to the maximum

Permissible deformation of mounting rails or pipe clamps, for example, was determined. The necessity for these considerations arises from the properties of the steel, which at 30 minutes is subjected to a temperature of >800 °C according to the standard temperature curve (ISO curve).

Reduction factors k_θ

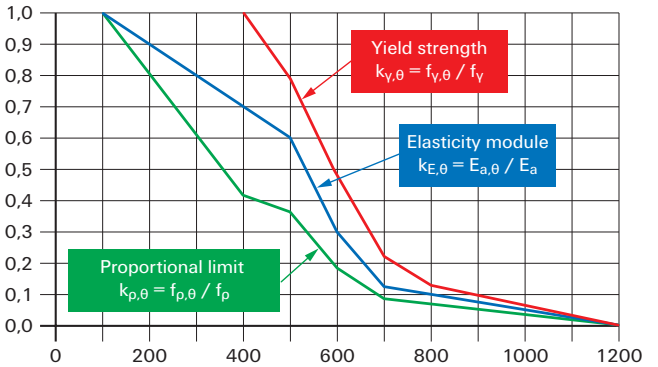

Dependency of the yield strength, proportional limit and elasticity module on the temperatutre (basis: EN1993-1-2:2012-12 Eurocode 3).

Steel temperature[°C]

Additionally, the same information is documented in the inspection reports for a fire resistance rating of R30, R60, R90 and R120 according to EN1363-1 and DIN4102-2. (see following load tables)

Product overview with proof in inspection reports and supplementary sheets.

Product	Document no.	MLAR	R30 – R120	F30 – F120
FRS	MFPA Leipzig - GS 3.2/14-175-2	•	•	
FUS / FCA	MFPA Leipzig - GS 3.2/14-175-4	•	•	
FRS-L Universal	MFPA Leipzig - GS 3.2/18-120-2	•	•	
FLS / ALK	MFPA Leipzig - GS 3.2/15-141-4	•	•	
SB	MPA-NRW - 210005109-7			•
SBS	MPA-NRW - 210005109-4	•		•
PDH-K	MPA-NRW - 210005109-6	•		•

Load tables based on fire protection inspection reports

Pipe clamp FRS

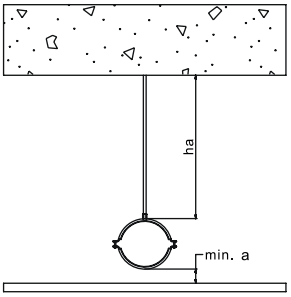

Load table based on the Adivisory Opinion No. GS 3.2/14-175-2
The following figures are valid for all FRS pipe clamps, galvanized, hdg and stainless steel.

FRS M8/M10		MLAR -loads		Max. Loads				
Threaded rods ≥ 4.8		strain	F-resistance	Max. strain	Fire resistance time [minute]			
Clamping range	h_a	min a	30	min a	30	60	90	120
[mm]	[mm]	[mm]	[kN]	[mm]	[kN]	[kN]	[kN]	[kN]
12 - 67	≤ 250	≤ 50	0,56	51	0,56	0,29	0,20	0,15
	≤ 500	≤ 50	0,56	54				
	≤ 750	≤ 50	0,56	57				
	≤ 1000	≤ 50	0,55	60				
72 - 92	≤ 250	≤ 50	0,65	50	0,79	0,49	0,36	0,29
	≤ 500	≤ 50	0,62	53				
	≤ 750	≤ 50	0,59	56				
	≤ 1000	≤ 50	0,57	59				
108 - 116	≤ 250	≤ 50	0,48	61	0,63	0,39	0,29	0,23
	≤ 500	≤ 50	0,43	64				
	≤ 750	≤ 50	0,39	66				
	≤ 1000	≤ 50	0,35	69				
121 - 168	≤ 250	≤ 50	0,96	61	1,00	0,51	0,34	0,25
	≤ 500	≤ 50	0,89	63				
	≤ 750	≤ 50	0,82	66				
	≤ 1000	≤ 50	0,85	69				

Pipe clamp FRS-L Universal

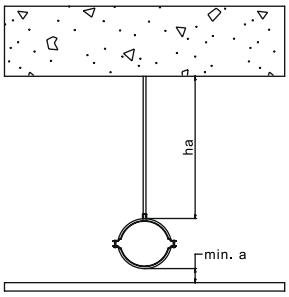

Load table based on the Adivisory Opinion No. GS 3.2/18-120-2
The following figures are valid for all FRS-L Universal pipe clamps, galvanized, hdg and stainless steel

FRS-L Universal M8/M10		MLAR -loads		Max. Loads				
Threadeed rods ≥ 4.8		strain	F-resistance	Max. strain	Fire resistance time [minute]			
Clamping range	h_a	min a	30	min a	30	60	90	120
[mm]	[mm]	[mm]	[kN]	[mm]	[kN]	[kN]	[kN]	[kN]
8 - 37	≤ 250	≤ 50	0,27	54	0,27	0,14	0,09	0,07
	≤ 500	≤ 50	0,26	57				
	≤ 750	≤ 50	0,24	60				
	≤ 1000	≤ 50	0,22	62				
38 - 66	≤ 250	≤ 50	0,17	72	0,29	0,14	0,09	0,06
	≤ 500	≤ 50	0,16	75				
	≤ 750	≤ 50	0,15	78				
	≤ 1000	≤ 50	0,13	80				
67 - 119	≤ 250	≤ 50	0,53	75	0,53	0,35	0,27	0,22
	≤ 500	≤ 50	0,53	78				
	≤ 750	≤ 50	0,53	81				
	≤ 1000	≤ 50	0,53	83				
120 - 172	≤ 250	≤ 50	0,40	65	0,42	0,31	0,25	0,22
	≤ 500	≤ 50	0,40	68				
	≤ 750	≤ 50	0,38	72				
	≤ 1000	≤ 50	0,36	75				

FUS-Channel / FCA-Cantilever arm

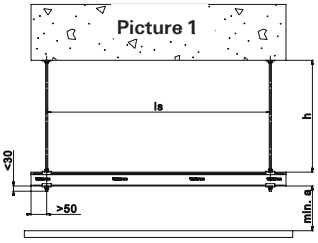

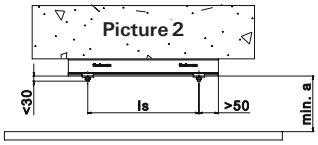

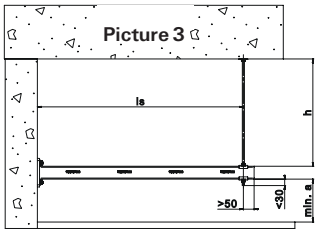

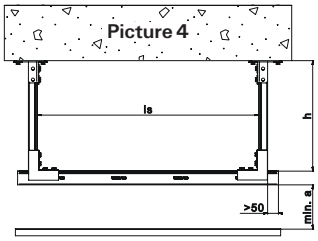

NOTE: Picture 1 - 3 are valid for FUS/FCA and FLS/ALK load tables

Load table based on the Adivisory Opinion No. GS 3.2/14-175-4
The following figures are valid for FUS channels and FCA cantilever arms, galvanized, hdg and stainless steel.

FUS / FCA 41/2,5 (Picture 1-3)		**MLAR -loads**		**Max. Loads**				
Threaded rods ≥ 4.8		strain	F-resistance	Max. strain	Fire resistance time [minute]			
Load case	l_s	min a [1]	30	min a [2]	30	60	90	120
	[mm]	[mm]	[kN]	[mm]	[kN]	[kN]	[kN]	[kN]
Point load	≤ 400	≤ 50	0,90	278	2,40	1,33	0,92	0,72
	≤ 700	≤ 50	-	320	1,61	1,04	0,80	0,67
Multiple load [3]	≤ 400	≤ 50	0,90	278	2,40	1,33	0,92	0,72
	≤ 700	≤ 50	-	320	1,61	1,04	0,80	0,67
Uniformly distributed load	≤ 400	≤ 50	1,50	258	3,00	2,10	1,41	1,06
	≤ 700	≤ 50	0,60	299	2,44	1,57	1,21	1,00
	≤ 1250	≤ 50	-	468	3,29	1,81	1,27	0,98
FUS / FCA 62/2,5 (Picture 1-3)		**MLAR -loads**		**Max. Loads**				
Threaded rods ≥ 4.8		strain	F-resistance	Max. strain	Fire resistance time [minute]			
Load case	l_s	min a [1]	30	min a [2]	30	60	90	120
	[mm]	[mm]	[kN]	[mm]	[kN]	[kN]	[kN]	[kN]
Point load	≤ 400	≤ 50	1,76	25	1,76	1,06	0,78	0,62
	≤ 1000	≤ 50	-	460	2,27	1,31	0,93	0,72
Multiple load [3]	≤ 400	≤ 50	1,76	25	1,76	1,06	0,78	0,62
	≤ 960 [4]	≤ 50	4,30	550	4,30	2,14	1,39	1,01
	≤ 1000	≤ 50	0,55	661	2,52	1,60	1,21	0,99
Uniformly distributed load	≤ 400	≤ 50	1,76	25	1,76	1,06	0,78	0,62
	≤ 960 [4]	≤ 50	4,30	550	4,30	2,14	1,39	1,01
	≤ 1000	≤ 50	0,55	661	2,52	1,60	1,21	0,99
	≤ 1250	≤ 50	0,50	592	2,41	1,65	1,31	1,11
FUS 62/2,5 (Picture 4)		**MLAR -loads**		**Max. Loads**				
Vertical FUS 41/2,5		strain	F-resistance	Max. strain	Fire resistance time [minute]			
Load case	l_s	min a [1]	30	min a [2]	30	60	90	120
	[mm]	[mm]	[kN]	[mm]	[kN]	[kN]	[kN]	[kN]
Point load	≤ 1000	≤ 50	0,57	369	1,33	0,87	0,68	0,57
Multiple load [3]	≤ 1000	≤ 50	0,62	649	1,92	1,34	1,08	0,92
Uniformly distributed load	≤ 1000	≤ 50	0,62	649	1,92	1,34	1,08	0,92

[1] Valid for a suspension height ha ³ 500 mm
[2] Based on suspension height ha = 250mm, Expansion length of threaded rods in case of fire ~ 10mm/m
[3] Given load values apply for multiple loads as summated point loads symmetrical allocated
[4] This values are valid for FCA 62/2,5 with additional support by threaded rod

FLS-Channel / ALK-Cantilever arm

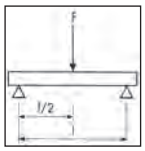

Point load
Spot load, e.g. a pipe-clamp on the rail.

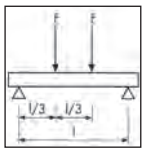

Uniform load
Uniform distribution of load on the rails, e.g. bend-proof ventilation duct.

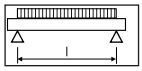

Multiple load
More than one load point on the rail, e.g. several pipe clamps.

Load table based on the Adivisory Opinion No. GS 3.2/15-141-4
The following figures are valid for FLS channels and ALK cantilever arms, galvanized, hdg and stainless steel.

FLS / ALK 37/1,2 (Picture 1-3)		**MLAR -loads**		**Max. Loads**				
Threaded rods ≥ 4.8		strain	F-resistance	Max. strain	Fire resistance time [minute]			
Load case	l_s	min a	30	min a	30	60	90	120
	[mm]	[mm]	[kN]	[mm]	[kN]	[kN]	[kN]	[kN]
Point load	≤ 400 [1]	≤ 50	0,24	93	0,24	0,13	0,10	0,09
	≤ 400 [2]	≤ 50	0,09	289	0,47	0,38	0,33	0,30
	≤ 400 [4]	≤ 50	0,32	226	1,33	0,78	0,53	0,40
Multiple load [3]	≤ 400 [1]	≤ 50	0,72	93	0,72	0,38	0,30	0,27
	≤ 400 [2]	≤ 50	0,26	289	1,42	1,13	0,99	0,90
	≤ 400 [4]	≤ 50	0,81	226	1,33	0,78	0,53	0,40
Uniformly distributed load	≤ 400 [1]	≤ 50	0,72	93	0,72	0,38	0,30	0,27
	≤ 400 [2]	≤ 50	0,35	308	1,37	1,19	1,06	0,95
	≤ 400 [4]	≤ 50	0,81	226	1,33	0,78	0,53	0,40

[1] Valid for a suspension height ha = 0 mm, s. picture 2
[2] Valid for a suspension height ha = 500mm, s. picture 1 (Expansion length of threaded rods in case of fire ~ 10mm/m)
[3] Given load values apply for multiple loads as summated point loads symmetrical allocated
[4] This values are valid for ALK 37-450 with additional support by threaded rod, s picture 3 (ha = 500 mm)

Mounting sprinkler systems

Sprinkler systems are usually created according to different standards. For example, according to the VdS standard (VdS CEA 4001), the American FM standard 1951 (Factory Mutual Insurance Company" (FM Global)), UL 203 (Underwriters Laboratories (UL)), NFPA 13 regulations (National Fire Protection Association (NFPA)) or EN 12845.

The European Directive CEA 4001 was created in 1995 by the insurance industry in cooperation with the manufacturers' association EUROFEU, and VdS CEA 4001 was created in Germany in 2003 by the "Association of Property Insurers" (VdS).

EN 12845 was developed on the basis of CEA 4001 from 1995 and the VdS CEA 4001 from 2003, creating a standard that was practically the same word for word. National practices, such as those for Germany, are to be included in a revised DIN 14489 as a national annex to EN 12845.

The American rules correspond to the requirements for mounting pipe installations ,but they must be checked in detail in each case. For mounting sprinkler pipes, the different load values, mounting distances and connection sizes for pipe loops and pipe clamps, which are listed in the following table for the most common directives, are applicable.

	FM1951				NFPA13				VdS CEA 4001			
Pipe sizes	Test load	Max. distance	Min. rod size		Test load calculated	Max. distance	Min. rod size		Loading capacity	Max. distance	Min. rod size	
DN	[kN]	[m]	[metric]	[inch]	[kN]	[m]	[metric]	[inch]	[kN]	[m]	[metric]	[inch]
15	-	-	-	-	1.4	3.60	9.5	3/8	2.0	4.00	M8	-
20	1.512	3.6	M10	3/8	1.5	3.60	9.5	3/8	2.0	4.00	M8	-
25	1.824	3.6	M10	3/8	1.7	3.66	9.5	3/8	2.0	4.00	M8	-
32	1.913	3.6	M10	3/8	1.9	3.66	9.5	3/8	2.0	4.00	M8	-
40	2.313	4.6	M10	3/8	2.4	4.57	9.5	3/8	2.0	4.00	M8	-
50	2.825	4.6	M10	3/8	2.9	4.57	9.5	3/8	3.5	4.00	M10	-
65	4.181	4.6	M10	3/8	3.8	4.57	9.5	3/8	3.5	6.00	M10	-
80	4.715	4.6	M10	3/8	4.8	4.57	9.5	3/8	3.5	6.00	M10	-
90	5.583	4.6	M10	3/8	5.7	4.57	9.5	3/8	3.5	6.00	M10	-
100	6.561	4.6	M10	3/8	6.7	4.57	9.5	3/8	5.0	6.00	M10	-
125	8.896	4.6	M12	1/2	9.0	4.57	12.7	1/2	5.0	6.00	M12	-
150	11.632	4.6	M12	1/2	11.8	4.57	12.7	1/2	8.5	6.00	M12	-
200	16.903	4.6	M12	1/2	18.2	4.57	12.7	1/2	8.5	6.00	M16	-
250	26.044	4.6	M16	5/8	26.7	4.60	15.9	5/8	-	6.00	-	-
300	35.141	4.6	M16	5/8	36.0	4.60	15.9	5/8	-	6.00	-	-
350	-	-	-	-	42.9	4.60	-	-	-	6.00	-	-
400	-	-	-	-	55.7	4.60	-	-	-	6.00	-	-
450	-	-	-	-	70.1	4.60	-	-	-	6.00	-	-
500	-	-	-	-	84.4	4.60	-	-	-	6.00	-	-

Mounting gas pipe

A specification for the usable anchors emerged from the DVGW-TRGI revision in 2008. This is regulated in TRGI 2008 in Chapter II under item 5.3 "Preparation of pipe installations". In the TRGI from 2008, plastic anchors are now explicitly allowed under certain conditions.

The basis in the previous TRGI was the determination that gas pipes need to be mounted in the way that there are no free pipe cross-sections in the event of fire. In the new version, this was amended in that, in the event of fire, there may be no free pipe cross-sections up to a temperature of 650 °C. For pipe connections, this means that the axial restraint was also specified, and a brazed pipe joint, for example, is not considered as an axial restraint. Thus, standard commercially available plastic anchors with non-combustible pipe supports may be used for mounting metal inner pipes with an axial restraint of >650 °C. It should be noted that attachments are made to components with sufficient strength according to TRGI 2008. In addition, the mounting distances are governed in TRGI 2008, and are mandatory.

According to DVGW-TRGI 2008, plastic pipes for indoor pipes with an operating pressure up to 100 mbar are also allowed for the first time. For laying plastic inner pipes, in comparison to metal and non-combustible pipe installations, plastic pipes for gas installations are, without exception, subject to the system engagement of the manufacturer.

The fixing materials for open gas pipes can also be made of plastic if the static requirements are met. The requirement for using plastic pipes in gas installations is the installation of a type K gas flow monitor in conjunction with an additional thermally activated shut-off device (TAE), as the destruction of the openly laid plastic gas pipes in the event of fire must be assumed.

Integration of rules regarding building classes according to the German model building regulations (MBO) was also implemented in DVGW TRGI 2008. An alignment of the fire protection requirements, which are specified in the German standard pipe systems directive (MLAR 2005) for the installation of pipes in buildings was, therefore, only logical. The limit for increased demands on the gas installation according to TRGI 2008 are > 2 utilisation units (building class 3) for buildings and for a floor level upper edge of more than 7m of the top floor (building class 4).

If any of these conditions exists, or if any of them are exceeded, it is not possible to lay plastic pipes in escape routes. For metal pipes, the requirements of MLAR 2005 for laying in installation channels or below plaster and plaster base are applicable. For pipe mounting with anchors, MLAR 2005 stipulates that either officially approved anchors are used or, alternatively, that the provisions of DIN4102-T.4, section 8.5.7.5 (or DIN EN 1366-1, section 13.6) are observed. The same rule also applies to the installation of pipes through officially approved partitions in walls and ceilings, as the mechanical destruction of the partitions by pipes in the event of fire must be prevented.

When installing gas pipes, we therefore recommend the use of approved metal anchors, since, through the general official approval and the European technical approval, the certificate of suitability for the anchor is provided, also for in the event of fire. This gives the installer the necessary safety, also at the limits.

Seismic and dynamic

The seismic and dynamic requirements for non-structural installations, such as pipe installations, are often underestimated in comparison to those of structural installations. But even here, the rule is that the weakest link in the chain can lead to failure or to damage.

Since basically every building in which such requirements, or additional requirements included by property insurers, such as FM, are different, it is also not possible to specify standard details. In addition, the solutions to be developed should also include the links to the components.

For this reason, we recommend everyone to use the support of our technical staff, in order to develop a suitable and project-specific solution.

www.fischer.de

Dimension and weights of pipes, ventilation ducts and ventilation pipes

Boiler pipe acc. to DIN 2448 / DIN EN 10220

DN	Size	Pipe outer-Ø [mm]	Pipe weight empty [kg/m]	Pipe weight water filled [kg/m]	Pipe weight water filled + insulated [1)] [kg/m]	Support widths [m]
8	1/4"	13.5	0.5	0.6	1.4	2.00
10	3/8"	17.2	0.7	0.8	1.9	2.25
15	1/2"	21.3	1.0	1.2	2.2	2.75
		25.0	1.1	1.5	2.8	2.75
20	3/4"	26.9	1.4	1.8	3.1	3.00
		30.0	1.8	2.3	4.0	3.00
		31.8	1.9	2.4	4.2	3.00
25	1"	33.7	2.0	2.6	4.7	3.50
		38.0	2.3	3.1	5.2	3.50
32	1 1/4"	42.4	2.6	3.7	5.7	3.75
		44.5	2.7	3.9	6.9	3.75
40	1 1/2"	48.3	3.0	4.4	7.4	4.25
		51.0	3.1	4.8	7.7	4.40
		57.0	3.9	6.0	10.0	4.60
50	2"	60.3	4.1	6.5	10.5	4.75
		63.5	4.4	7.0	11.0	4.75
		70.0	4.8	8.1	13.4	4.75
65	2 1/2"	76.1	5.3	9.2	14.8	5.50
		82.5	6.3	10.9	19.2	5.75
80	3"	88.9	6.8	12.2	20.4	6.00
		101.6	8.8	15.8	27.0	6.00
		108.0	9.3	17.3	29.1	6.00
100	4"	114.3	9.9	18.9	30.6	6.00
		127.0	12.2	23.3	36.1	6.00
		133.0	12.8	25.1	37.8	6.00
125	5"	139.7	13.5	27.1	40.3	6.00
		152.4	16.5	32.7	47.1	6.00
		159.0	17.3	34.9	49.2	6.00
		165.1	17.9	37.1	52.0	6.00
150	6"	168.3	18.3	38.2	53.0	6.00
		177.8	21.4	43.6	58.1	6.00
		193.7	25.2	51.5	68.0	6.00
200	8"	219.1	31.2	65.0	83.3	6.00
		244.5	37.2	79.5	98.6	6.00
		267.0	40.8	91.6	112.7	6.00
250	10"	273.0	41.6	94.9	117.7	6.00
300	12"	323.9	55.6	131.0	156.6	6.00

1) Heat insulation: density 120 kg/m³ + sheet metal jacket: density 7865 kg/m³
2) Heat insulation: density 120 kg/m³

The corresponding pipe manufacturer´s data are to be considered.

Threaded pipe acc. to DIN 2440 / DIN EN 10255

DN	Size	Pipe outer-Ø [mm]	Pipe weight empty [kg/m]	Pipe weight water filled [kg/m]	Pipe weight water filled + insulated [1)] [kg/m]	Support widths [m]
8	1/4"	13.5	0.7	0.7	1.6	2.00
10	3/8"	17.2	0.9	1.0	2.0	2.25
15	1/2"	21.3	1.2	1.4	2.5	2.75
20	3/4"	26.9	1.6	2.0	3.2	3.00
25	1"	33.7	2.4	3.0	5.1	3.50
32	1 1/4"	42.4	3.1	4.2	6.2	3.75
40	1 1/2"	48.3	3.6	5.0	8.0	4.25
50	2"	60.3	5.1	7.3	11.4	4.75
65	2 1/2"	76.1	6.5	10.2	15.9	5.50
80	3"	88.9	8.5	13.6	21.8	6.00
100	4"	114.3	12.1	20.8	32.5	6.00
125	5"	139.7	16.2	29.5	42.7	6.00
150	6"	165.1	19.2	38.2	53.1	6.00

fischer innovative solutions

Copper pipe acc. to DIN EN 1057

DN	Size	Pipe outer-Ø [mm]	Pipe weight empty [kg/m]	Pipe weight water filled [kg/m]	Pipe weight water filled + insulated [2] [kg/m]	Support widths [m]
8	10 x 1	10	0.3	0.3	0.4	1.00
10	12 x 1	12	0.3	0.4	0.5	1.25
12	15 x 1	15	0.4	0.5	0.8	1.25
15	18 x 1	18	0.5	0.7	1.0	1.50
20	22 x 1	22	0.6	0.9	1.3	2.00
25	28 x 1.5	28	1.1	1.6	2.4	2.25
32	35 x 1.5	35	1.4	2.2	3.1	2.75
40	42 x 1.5	42	1.7	2.9	4.4	3.00
50	54 x 2	54	2.9	4.9	7.3	3.50
	64 x 2	64	3.5	6.3	9.8	4.00
65	76.1 x 2	76.1	4.1	8.2	14.0	4.25
80	88.9 x 2	88.9	4.9	10.5	16.4	4.75
100	108 x 2.5	108	7.4	15.7	27.5	5.00

Stainless steel pressure system

DN	Size	Pipe outer-Ø [mm]	Pipe weight empty [kg/m]	Pipe weight water filled [kg/m]	Pipe weight water filled + insulated [2] [kg/m]	Support widths [m]
12	15 x 1	15	0.3	0.5	0.8	1.50
15	18 x 1	18	0.4	0.6	1.0	1.50
20	22 x 1.2	22	0.6	0.9	1.3	2.50
25	28 x 1.2	28	0.8	1.3	2.4	2.50
32	35 x 1.5	35	1.2	2.0	3.1	3.50
40	42 x 1.5	42	1.5	2.7	4.4	3.50
50	54 x 1.5	54	2.0	4.0	7.3	3.50
65	76.1 x 2	76.1	3.6	7.6	14.0	5.00
80	88.9 x 2	88.9	4.2	9.8	16.4	5.00
100	108 x 2	108	5.1	13.5	27.5	5.00

Metal composite pipe

DN	Size	Pipe outer-Ø [mm]	Pipe weight empty [kg/m]	Pipe weight water filled [kg/m]	Pipe weight water filled + insulated [2] [kg/m]	Support widths [m]
10	14 x 2	14	0.1	0.2	0.4	1.0
12	16 x 2.25	16	0.1	0.2	0.5	1.0
15	20 x 2.5	20	0.2	0.4	0.7	1.0
20	26 x 3	26	0.3	0.6	0.9	1.5
25	32 x 3	32	0.4	0.9	1.2	2.0
32	40 x 3.5	40	0.6	1.5	2.1	2.0
40	50 x 4	50	0.9	2.3	3.2	2.5
50	63 x 4.5	63	1.3	3.6	5.2	2.5

1) Heat insulation: density 120 kg/m³ + sheet metal jacket: density 7865 kg/m³
2) Heat insulation: density 120 kg/m³

The corresponding pipe manufacturer's data are to be considered.

Drain pipe, cast iron, SML, DIN EN 877

DN	Pipe outer-Ø [mm]	Pipe weight empty [kg/m]	Pipe weight water filled [kg/m]	Support widths [m]
40	48	3.1	4.5	1)
50	58	4.3	6.4	1)
70	78	5.9	9.9	1)
80	83	6.1	10.6	1)
100	110	8.4	17.7	1)
125	135	11.8	24.5	1)
150	160	14.1	32.3	1)
200	210	23.1	54.6	1)
250	274	33.3	87.7	1)
300	326	43.2	120.8	1)
400	429	60.0	193.3	1)
500	532	82.6	290.1	1)

Drain pipe, PVC-U, DIN 8062

DN	Pipe outer-Ø [mm]	Pipe weight empty [kg/m]	Pipe weight water filled [kg/m]	Support widhts 20° [m]	Support widhts 40° [m]
40	50	0.8	1.3	0.8	0.6
50	63	1.3	2.0	1.1	0.7
65	75	1.8	3.9	1.3	0.8
80	90	2.6	3.9	1.3	0.8
100	110	3.9	8.0	1.6	1.0
125	125	5.0	12.4	1.8	1.1
150	160	8.2	18.0	2.2	1.2

LORO-X steel drain pipe

DN	Pipe outer-Ø [mm]	Pipe weight empty [kg/m]	Pipe weight water filled [kg/m]	Support widths [m]
40	42	1.5	2.7	1)
50	53	2.2	4.2	1)
70	73	3.3	7.1	1)
80	89	4.1	9.9	1)
100	102	5.8	13.3	1)
125	133	9.6	22.5	1)
150	159	11.5	30.1	1)
200	219	21.5	57.2	1)
250	273	22.5	78.5	1)
300	324	25.0	104.4	1)

Drain pipe, GA, DIN 19500

DN [mm]	Pipe outer Ø [mm]	Wall thickness [mm]	Pipe weight empty [kg/m]	Pipe weight water filled [kg/m]	Support widths [m]
50	60	3,5	5,19	7,39	1)
70	80	3,5	7,02	11,21	1)
100	112	4,0	11,33	19,83	1)
125	137	4,0	13,96	27,03	1)
150	162	5,0	20,59	38,74	1)
200	212	6,0	32,42	63,84	1)

NOTE: The values for the max. support widths are based on the permissible deflection under load of the pipes and the corresponding recommendations from the pipe manufacturer. The permissible loads of the pipe fasteners and mountings are not taken into consideration.

1) approx. 1,50 m – 2,00 m. According to the manufacturer's data, each pipe length should be supported in at least two places. The corresponding data from the pipe manufacturer are to be taken into consideration.

Drain pipe, PE, DIN 19535

DN	Pipe outer-Ø [mm]	Pipe weight empty [kg/m]	Pipe weight water filled [kg/m]	Support widths [m]
25	32	0.3	0.8	0.5
32	40	0.3	1.3	0.5
40	50	0.4	2.0	0.8
50	56	0.5	2.5	0.8
57	63	0.6	3.1	0.8
70	75	0.7	4.4	0.8
80	90	1.0	6.4	0.9
100	110	1.4	9.5	1.1
125	125	1.8	12.3	1.3
125	140	2.3	15.4	1.4
150	160	3.0	20.1	1.6
200	200	3.8	31.5	2.0
250	250	6.0	49.2	2.0

Weights of galvanized ventilation ducts in kg/m without insulation

Sheet metal 0.75			Sheet metal 0.88						Sheet metal 1.0						Sheet metal 1.13						Sheet metal 1.25				
200	224	250	280	315	355	400	450	500	560	630	710	800	900	1000	1120	1250	1400	1600	1800	2000	2240	2500	2800	3150	◄B ▼H
6.6	7.0	7.4	9.3	10.0	10.7	11.6	12.6	13.6	16.7	18.3	20.0	22.0	24.2	26.4	32.8	36.0	39.8	44.7	49.7	54.7	70.2	77.6	86.3	96.3	200
	7.4	7.8	9.8	10.4	11.2	12.1	13.0	14.0	17.2	18.8	20.5	22.5	24.7	26.9	33.4	36.6	40.4	45.3	50.3	55.3	70.8	78.3	86.9	97.0	224
		8.3	10.3	10.9	11.7	12.6	13.6	14.5	17.8	19.4	21.1	23.1	25.3	27.5	34.1	37.3	41.0	46.0	51.0	55.9	71.6	79.1	87.7	97.8	250
			10.8	11.5	12.3	13.2	14.1	15.1	18.5	20.0	21.8	23.8	26.0	28.2	34.8	38.0	41.8	46.7	51.7	56.7	72.5	79.9	88.6	98.6	280
				12.2	13.0	13.8	14.8	15.8	19.3	20.8	22.6	24.5	26.7	28.9	35.7	38.9	42.6	47.6	52.6	57.6	73.5	80.9	89.6	99.6	315
					13.7	14.6	15.6	16.6	20.1	21.7	23.4	25.4	27.6	29.8	36.7	39.9	43.6	48.6	53.6	58.5	74.6	82.1	90.7	100.8	355
						15.5	16.5	17.4	21.1	22.7	24.4	26.4	28.6	30.8	37.8	41.0	44.7	49.7	54.7	59.7	75.9	83.4	92.0	102.1	400
							17.4	18.4	22.2	23.8	25.5	27.5	29.7	31.9	39.0	42.3	46.0	51.0	55.9	60.9	77.3	84.8	93.4	103.5	450
								19.4	23.3	24.9	26.6	28.6	30.8	33.0	40.3	43.5	47.2	52.2	57.2	62.2	78.8	86.3	94.9	104.9	500
									24.6	26.2	27.9	29.9	32.1	34.3	41.8	45.0	48.7	53.7	58.7	63.6	80.5	88.0	96.6	106.7	560
										27.6	29.5	31.5	33.7	35.9	43.5	46.7	50.5	55.4	60.4	65.4	82.5	90.0	98.6	108.7	630
											31.2	33.2	35.4	37.6	45.5	48.7	52.5	57.4	62.4	67.4	84.4	92.3	100.9	111.0	710
												35.2	37.4	39.6	47.7	51.0	54.7	59.7	64.6	69.6	87.4	94.9	103.5	113.6	800
													39.6	41.8	50.2	53.4	57.2	62.2	67.1	72.1	90.3	97.8	106.4	116.4	900
														44.0	52.7	55.9	59.7	64.6	69.6	74.6	93.2	100.6	109.3	119.3	1000
															55.7	58.9	62.6	67.6	72.6	77.6	96.6	104.1	112.7	122.8	1120
																62.2	65.9	70.9	75.8	80.8	100.3	107.8	116.4	126.5	1250
																	69.6	74.6	79.6	84.5	104.7	112.1	120.8	130.8	1400
																		79.6	84.5	89.5	110.4	117.9	126.5	136.6	1600
																			89.5	94.5	116.2	123.6	132.3	142.3	1800
																				99.4	121.9	129.4	138.0	148.1	2000
																					128.8	136.3	144.9	155.0	2240
																						143.8	152.4	162.4	2500
																							161.0	171.1	2800
																								181.5	3150

The weights in kg/m are reference values. The weights can deviate, depending on the sheet metal thickness and the type of flange used. The flange weight is included flat -rate. The loads based on a mineral wool weight of 80 kg/m2 and a thickness of 5 cm.

Weights of galvanized ventilation ducts in kg/m with (80 kg/m3, 5 cm thickness)

Sheet metal 0.75			Sheet metal 0.88						Sheet metal 1.00						Sheet metal 1.13						Sheet metal 1.25				
200	224	250	280	315	355	400	450	500	560	630	710	800	900	1000	1120	1250	1400	1600	1800	2000	2240	2500	2800	3150	◄B ▼H
9.1	9.6	10.2	12.1	13.0	14.0	15.2	16.4	17.7	21.0	22.9	25.1	27.6	30.4	33.2	39.8	43.8	48.3	54.3	60.4	66.4	79.4	87.8	97.6	109.0	200
	10.2	10.8	13.8	13.6	14.6	15.8	17.0	18.3	21.7	23.6	25.8	28.3	31.1	33.8	40.6	44.5	49.0	55.0	61.1	67.1	80.2	88.6	98.4	109.8	224
		11.4	14.5	14.3	15.3	16.4	17.7	19.0	22.4	24.3	26.5	29.0	31.8	34.5	41.3	45.3	49.8	55.8	61.9	67.9	81.0	89.5	99.2	110.6	250
			15.3	15.0	16.0	17.2	18.4	19.7	23.2	25.1	27.3	29.8	32.6	35.4	42.2	46.2	50.7	56.7	62.8	68.8	82.0	90.4	100.2	111.6	280
				15.9	16.9	18.1	19.3	20.6	24.2	26.1	28.3	30.8	33.6	36.3	43.3	47.2	51.8	57.8	63.8	69.9	83.1	91.6	101.3	112.7	315
					17.9	19.1	20.3	21.6	25.3	27.2	29.4	31.9	34.7	37.4	44.5	48.4	53.0	59.0	65.0	71.1	84.4	92.9	102.6	114.0	355
						20.2	21.5	22.7	26.5	28.5	30.7	33.2	35.9	38.7	45.9	49.8	54.3	60.4	66.4	72.4	85.9	94.3	104.1	115.5	400
							22.7	24.0	27.9	29.8	32.0	34.5	37.3	40.1	47.4	51.3	55.8	61.9	67.9	73.9	87.5	96.0	105.7	117.1	450
								25.3	29.3	31.2	33.4	35.9	38.7	41.4	48.9	52.8	57.3	63.4	69.4	75.4	89.1	97.6	107.4	118.7	500
									30.9	32.9	35.1	37.6	40.3	43.1	50.7	54.6	59.1	65.2	71.2	77.3	91.1	99.5	109.3	120.7	560
										34.8	37.0	39.5	42.3	45.0	52.8	56.7	61.3	67.3	73.3	79.4	93.4	101.8	111.6	123.0	630
											39.2	41.7	44.5	47.2	55.2	59.1	63.7	69.7	75.7	81.8	96.0	104.4	114.2	125.6	710
												44.2	47.0	49.7	57.9	61.9	66.4	72.4	78.5	84.5	98.9	107.4	117.1	128.5	800
													49.7	52.5	61.0	64.9	69.4	75.4	81.5	87.5	102.1	110.6	120.4	131.8	900
														55.3	64.0	67.9	72.4	78.5	84.5	90.5	105.4	113.9	123.6	135.0	1000
															67.6	71.5	76.0	82.1	88.1	94.1	109.3	117.8	127.5	138.9	1120
																75.4	80.0	86.0	92.0	98.1	113.5	122.0	131.8	143.1	1250
																	84.5	90.5	96.6	102.6	118.4	126.9	136.6	148.0	1400
																		96.6	102.6	108.6	124.9	133.4	143.1	154.5	1600
																			108.6	114.7	131.4	139.9	149.6	161.0	1800
																				120.7	137.9	146.4	156.2	167.5	2000
																					145.7	154.2	164.0	175.3	2240
																						162.7	172.4	183.8	2500
																							182.2	193.6	2800
																								204.9	3150

Spiral lock seam pipe, round, acc. to DIN EN12237

DN	71	80	90	100	112	125	140	150	160	180	200	224	250	280	300	315	355	400	450	500	560	600	630	710	800	900	1000	1120	1250
Pipe outer-Ø [mm]	75	84	94	105	117	130	145	155	165	185	205	229	255	285	307	322	362	407	457	507	567	609	639	719	810	1012	1012	1132	1262
Sheet thickness [mm]	0.4	0.4	0.4	0.6	0.6	0.6	0.6	0.6	0.6	0.6	0.6	0.6	0.6	0.6	0.8	0.8	0.8	0.8	0.8	0.8	0.8	1.0	1.0	1.0	1.0	1.0	1.2	1.2	1.2
Pipe weight empty [kg/m]	0.8	0.9	1.0	1.7	1.9	2.1	2.4	2.6	2.7	3.1	3.4	3.8	4.2	4.7	5.2	7.1	8.0	9.0	10.2	11.3	12.6	13.5	17.7	20.0	22.5	25.4	34.9	39.1	43.7

Important dimensions, variables and units

Comparison of material standards

DIN EN ISO			ASTM
Description	Material-No.		
S 250 GD+Z	1.0242	EN 10027-2	A 653
DD11	1.0332	DIN EN 10111	A 621 CQ
DC01	1.0330	DIN EN 10130	A 366
St 22	1.0320	DIN 1614-1	n/a
DX51D+Z 275 NA-C	1.0226+Z	DIN EN 10327	A 653/CQ
S235JR	1.0037	DIN EN 10025	A 283
S 355 MC	1.0976	DIN EN 10149	n/a
4.6 ; 4.8	DIN EN ISO 898-1		F 568M

Variables and units

Size	Formula symbol	Unit SI	others	related	Note
Length	l	m		1 m = 10 dm = 100 cm = 1.000 mm 1 mm = 1.000 µm 1 km = 1.000 m	1 inch = 1 Zoll = 25.4 mm
Area	A, S	m^2	a, ha	1 m^2 = 10.000 cm^2 = 1.000.000 m^2 1 a = 100 m^2 1 ha = 100 a = 10.000 m^2	
Volume	V	m^3	l	1 m^3 = 1.000 dm^3 = 1.000.000 cm^3 1 l = 1 dm^3 = 0.001 m^3 1 ml = 1 cm^3	
Time	t	s	min, h, d	1 min = 60 s 1 h = 60 min = 3.600 s 1 d = 24 h	
Frequency	f	Hz		1 Hz = 1/s	
Speed	v	m/s	m/s, km/h	1 m/s = 3.6 km/h	
Acceleration	a, g	m/s^2		g = 9.81 m/s^2	Formula symbol g for gravity only
Weight	m	kg	g, t	1 kg = 1.000 g 1 t = 1.000 kg	
Density	ρ	kg/m^3		1.000 kg/m^3 = 1 t/m^3 = 1 kg/dm^3	
Moment of inertia, 2nd degree	J	kg • m^2			Previously: mass moment of inertia
Force	F	N		1 N = 1 kg • m/s^2	Previously: kp (Kilopond) 1 kp = 9.80665 kgm/s^2 = 9.81 N
Torque	M	N • m			
Bending moment	M_b	N • m			
Torsion moment	T	N • m			
Mechanical tension	σ, τ	N/m^2			
Area-wise moment, 2nd degree	I	m^4			Previously: area moment of inertia
Energy, work	E, W	J		1 J = 1 N • m = 1 W • s	in former times: cal (Calorie) 1 cal = 4.1868 Ws = 4.19 J
Power	P	W		1 W = 1 J/s = 1 N • m/s	in former times: PS (Horse power) 1 PS = 75 kpm/s = 75 • 9.81 N/ms = 0.736 kW
Thermodynamic temperature	T	K		0 °C = 273 K; -273 C = 0 K	
Heat quantity	Q	J	(Wh)	1 J = 1 W • s = 1 N • m	
Specific heat value	H	J/kg			
Substance quantity	n	mol		1 mol corresponds to approx. $6 \cdot 10^{23}$	
Light intensity	I_v	cd			

Approvals, markings and their importance

In the following, excerpts of approvals that are currently issued in Europe and their symbols will be given with their corresponding importance. Please check wether your application is safety relevant.

An application is safety relevant when failure of anchorages would cause risk to human life or serious injuries and/or lead to considerable economic consequences. In this case please use anchors with a European Technical (ETA) or with a German Approval. You may recognise these anchors by:

European Technical Approval: issued by a European approval authority (e.g. DIBt) on the basis of the guidelines for European technical approvals (ETAG) ETA: European Technical Approval/Options 1–12
CE: European conformity mark confirms the compliance of the building product (e.g. fixing) with the guidelines for European Technical Approvals. Products with the CE mark can be freely traded in the European economic market.

European Technical Approval: Additional information abaut seismic performance is given for approval anchor system below the ETA sign.

General building authority approval: German approval, issued by the DIBt, Berlin. Proof of compliance of the building product with the general building authority approval. confirmed by a material testing facility.

FM Certificate: Recognised for use in local water-based fire extinguisger systems (Factory Mutual Research Corporation for Property Conservation, American insurance company).

General building authority approval: German approval, issued by the DIBt, Berlin for anchorings in concrete to be dimensioned according to Method A (CC method).
Proof of compliance of the building product with the general building authority approval. confirmed by a material testing facility.

ICC = International Code Council, formed from BOCA, ICBO & SBCCI: ICC Evaluation Service Inc. (ICC ES) issues evaluation reports, in this case for the above anchor based upon the Uniform Building CodeTM and related codes in the United States of America.

ZTV: Fire behaviour tested according temperature – time curve of ZTV-ING: 2003-1, part 5 tunnel.

Biobased 50-85%: tested by DIN CERTCO/ TÜV Rheinland.

RWS: Fire behaviour tested according Rijkswaterstaat (RWS) time - temperature curve.

Nylon Quality: Fixing of high-quality, aging-resistant nylon (polyamide).

Fixing that can be dynamically loaded: The fixing is suitable and approved for anchoring of "not predominantly static" (i.e. dynamic) loads.

Sprinkler Systems: Meets the requirements according to VdS CEA 4001.

Seismic: The anchor system is suitable for loads under seismic action.

Tested for flame resistance according to VDE.

Fire-tested product MLAR: The product was subjected to a fire test. A "Examination report regarding testing according the german Muster-Leitungsanlagenrichtlinie" (MLAR) is available.

Fire-tested fixing: The fixing or installation product was subjected to a fire test. A "Examination report regarding testing for fire behaviour" according EN 13501 (with R class) is available.

Fire-tested fixing: The fixing was subjected to a fire test. A "Examination report regarding testing for fire behaviour" (with R class) is available.

Fire-tested product DIN EN 1366-1: The product was subjected to a fire test. A "Examination report" according DIN EN 16366-1 is available.

Fire-tested product DIN 4102-2: The product was subjected to a fire test. A "Examination report" according DIN 4102-2 is available.

Sound insulation tested according DIN 4109: The product was subjected to a sound insulation test. A "measurement of the insertion loss" is available in a test report.

VdS-Certificate: Recognised for the use in local water-based fire extinguisher systems (formerly: Association of Property Insurers, now: VdS Damage Prevention)

UL Certificate: Recognised as pipe hangers for use e.g. in local water-based fire extinguisger systems (UL Online Certification Directory, VFXT.EX16429).

Main Catalogue Fixing Systems

All facts about the fischer fast and secure product selection and their applications.

- Presentation of products and systems with detailed technical data and illustrations.
- Installation and application support.
- Load tables and technical datas.
- Fundamentals of fastening technology
- Basic knowledge of installation systems.
- Available design software.

Order now: info@fischer.com

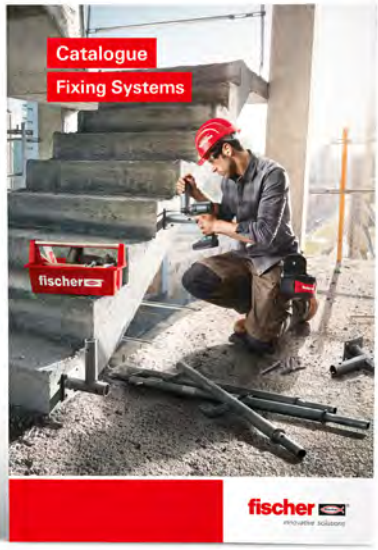

Main Catalogue Screws

All facts about the fischer screw range and their applications.

- Presentation of products with detailed technical data and illustrations.
- Load tables for construction screws.
- Application support.
- Basic knowledge about connections with screws
- Available design software.

Order now: info@fischer.com

International FireStop Handbook

All facts about the fischer FireStop systems and their applications.

- Presentation of products and systems with detailed technical data and accordance to relevant international standards.
- Anchors suitable to fix sprinkler systems.
- Application support.
- Basic knowledge about active and passive fire prevention as well as air and acoustic sealing systems.

Order now: info@fischer.com

Join fischer online

3D CAD Database

- 2D and 3D export possible
- Various drawing formats selectable
- Low and high level of details
- 3D preview with spatial rotation
- Direct export from database into CAD system

Discover now:
www.fischer-international.com/service

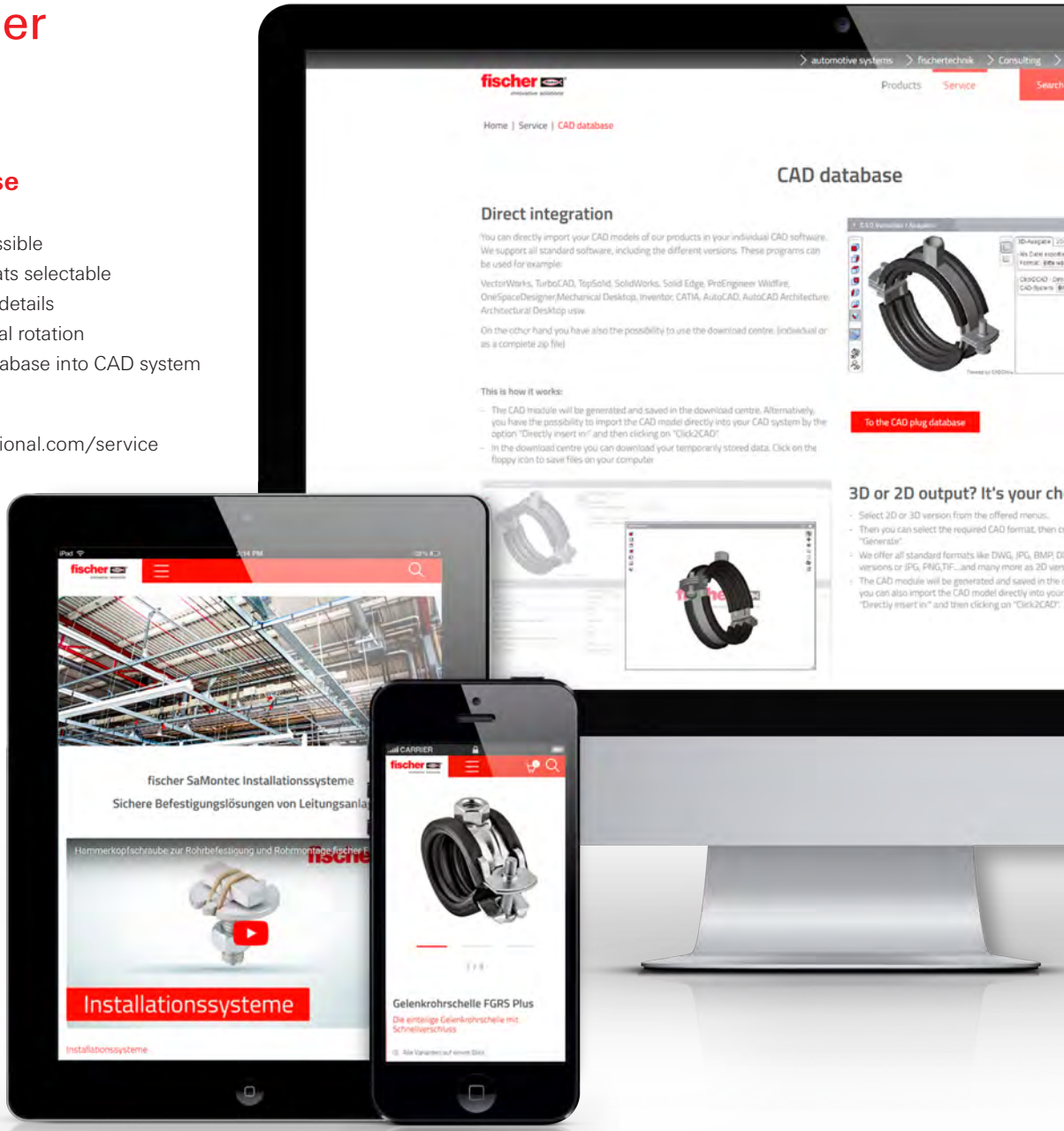

Product Online Catalogue

- Latest product information with continuous updating and / or expansion.
- Access to all important technical data, load tables and approvals and also CAD details in 2D an 3D.
- Technical tables separated according to materials with reference to current approvals.
- Compare the products in clear tables.
- Put your own catalogue together using the PDF export function – a PDF file will be generated from the current database.
- Product search allows you fast, direct access to product information.
- Looking for approvals? Under "Technical Documents" you will find the current document you are looking for with data on the approval number, validity and language version.

Discover now:
www.fischer-international.com/products

fischer
innovative solutions

Innovations to inspire professionals

DISCOVER MORE UNDER:

www.fischer-international.com

Germany
fischer Deutschland Vertriebs GmbH
Klaus-Fischer-Straße 1
72178 Waldachtal
Tel.: +49 7443 12 6000
Fax.: +49 7443 12 4500
E-Mail: info@fischer.de
http://www.fischer.de

Argentina
fischer Argentina s.a.
Armenia 3044
1605 Munro Ra-PCIA Buenos Aires
Tel.: +54 1147 62 27 78
Fax.: +54 1147 56 13 11
E-Mail: asistenciatecnica@fischer.com.ar
http://www.fischer.com.ar

Austria
fischer Austria GmbH
Wiener Straße 95
2514 Traiskirchen
Tel.: +43 2252 53730 0
Fax.: +43 2252 53730 70
E-Mail: office@fischer.at
http://www.fischer.at

Belgium
fischer Cobemabel snc
Schaliënhoevedreef 20 D
2800 Mechelen
Tel.: +32 152 8 47 00
Fax.: +32 152 8 47 10
E-Mail: info@fischer.be
http://www.fischer.be

Brazil
fischer brasil Industria e Comercio Ltda.
Estrada do Dende, 300 Ilha do Governador
21920-001 Rio de Janeiro-RJ
Tel.: +55 21 2467 1130
Fax.: +55 21 2467 0144
E-Mail: fischer@fischerbrasil.com.br
http://www.fischerbrasil.com.br

China
fischer (Taicang) fixings Co. Ltd.
Shanghai Rep. Office Rm 1503-1504, No. 63 Chifeng Road
200092 Shanghai
Tel.: +86-021-65975388
Fax.: +86-021-65979622
E-Mail: ficnsh@fischer.com.cn
http://www.fischer.com.cn

China
fischer (Taicang) fixings Co. Ltd.
Building 1, No.105 North Dongcang Rd.
215400 Taicang Jiangsu
Tel.: +86 512 53 58 89 38
Fax.: +86 512 53 58 89 48
E-Mail: ficn@fischer.com.cn
http://www.fischer.com.cn

Czech Republic
fischer international s.r.o.
Prùmyslová 1833
25001 Brandýs nad Labem
Tel.: +42 03 26 90 46 01
Fax.: +42 03 26 90 46 00
E-Mail: info@fischer-cz.cz
http://www.fischer-cz.cz

Denmark
fischer a/s
Sandvadsvej 17 A
4600 Køge
Tel.: +45 46 32 02 20
Fax.: +45 46 32 50 52
E-Mail: fidk@fischerdanmark.dk
http://www.fischerdanmark.dk

Finland
fischer Finland Oy
Suomalaistentie 7 B
02270 Espoo
Tel.: +358 20 7414660
Fax.: +358 20 7414669
E-Mail: orders@fischerfinland.fi
http://www.fischerfinland.fi

France
fischer S. A. S.
12, rue Livio, P. O. Box 10182
67022 Strasbourg-Cedex 1
Tel.: +33 388 39 18 67
Fax.: +33 388 39 80 44
E-Mail: info@fischer.fr
http://www.fischer.fr

Greece
fischer Hellas Emporiki EPE
Nat. Road Athens-Lamia (17th) & Roupel 6
Kifissia Athens
Tel.: +30 210 2838167
Fax.: +30 210 2838169
E-Mail: info@fischer.gr
http://www.fischer.gr

Hungary
fischer Hungária Bt.
Szerémi út 7/b
1117 Budapest
Tel.: +36 1 347 97 55
Fax.: +36 1 347 97 66
E-Mail: info@fischerhungary.hu
http://www.fischerhungary.hu

India
fischer BUILDING MATERIAL INDIA PVT LTD.
PRESTIGE GARNET UNIT NO- 401, 4TH FLOOR 36, ULSOOR ROAD
560042 Bangalore KARNATAKA
Tel.: +91 08041511991 92 93
Fax.: +91 08041511989
E-Mail: info@fischer.in
http://www.fischer.in

Italy
fischer italia S.R.L
Corso Stati Uniti, 25, Casella Postale 391
35127 Padova Z.I. Sud
Tel.: +39 049 8 06 31 11
Fax.: +39 049 8 06 34 01
E-Mail: sercli@fischeritalia.it
http://www.fischeritalia.it

Japan
fischer Japan K.K.
Seishin Kudan Building 3rd Floor 3-4-15 Kudan Minami
Chiyoda-ku
102-0074 Tokyo
Tel.: +81 3 3263 4491
Fax.: +81 3 6272 9935
E-Mail: info@fischerjapan.co.jp
http://www.fischerjapan.co.jp

Korea, Republic of
fischer Korea Co., Ltd
B-903, #131, Kasan Digital-1Ro, Geumcheon-Gu
153-803 Seoul
Tel.: +82 1544 8955
Fax.: +82 1544 8903
E-Mail: info@fischerkorea.com
http://www.fischerkorea.com

Mexico
fischer Sistemas de Fijación, S.A. de C.V.
Blvd. Manuel Avila Camacho 3130-400B
54020 Col. Valle Dorado, Tlalnepantla
Tel.: +52 55 55 72 08 83
Fax.: +52 55 55 72 15 90
E-Mail: info@fischermex.com.mx
http://www.fischermex.com.mx

Netherlands
fischer Benelux B.V.
Amsterdamsestraatweg 45 B/C
1411 AX Naarden
Tel.: +31 35 6 95 66 66
Fax.: +31 35 6 95 66 99
E-Mail: info@fischer.nl
http://www.fischer.nl

Norway
fischer Norge AS
Oluf Onsumsvei 9
0680 Oslo
Tel.: +47 23 24 27 10
Fax.: +47 23 24 27 13
E-Mail: ordre@fischernorge.no
http://www.fischernorge.no/

Philippines
fischer PH Asia, Inc.
No 100 Congressional Avenue, Project 8
1106 Quezon City
Tel.: +63 2426 / 0888 217
Fax.: +63 28803256
E-Mail: joselito.ladlad@fischerph.com
http://www.fischer.ph

Poland
fischerpolska Sp.z o.o
ul. Albatrosow 2
30-716 Kraków
Tel.: +48 12 2 90 08 80
Fax.: +48 12 2 90 08 88
E-Mail: info@fischerpolska.pl
http://www.fischerpolska.pl

Portugal
fischerwerke Portugal, Lda.
Av. Casal da Serra Nº 7, R/C
2625-085 Póvoa de Santa Iria
Tel.: +351 21 953 74 50
Fax.: +351 21 959 13 90
E-Mail: fischerportugal.info@fischer.es
http://www.fischer.pt

Romania
fischer fixings Romania S.R.L.
Calea Baciului Nr. 179
Cluj-Napoca
Tel.: +40 264 455 166
Fax.: +40 264 403 060
E-Mail: office@fischer.com.ro
https://www.fischer.com.ro

Russian Federation
OOO fischer Befestigungssysteme Rus
Leningradskoe shosse, 47, Bldg. 2, 2nd floor, apt. VI
125195 Moscow
Tel.: +7 495 223 03 34
Fax.: +7 495 223 03 34
E-Mail: info@fischerfixings.ru
http://www.fischerfixings.ru

Singapore
fischer systems Asia Pte. Ltd.
4 Kaki Bukit Avenue 1, #01-06
417939. Singapore
Tel.: +65 6741 0480
Fax.: +65 6741 0481
E-Mail: sales@fischer.sg
http://www.fischer.sg

Slovakia
fischer S.K. s.r.o.
Nová Rožňavská 134 A
831 04 Bratislava
Tel.: +421 2 4920 6046
Fax.: +421 2 4920 6044
E-Mail: info@fischerwerke.sk
http://www.fischer-sk.sk

Spain
fischer Ibérica S.A.U.
Klaus Fischer 1
43300 Mont-Roig del Camp Tarragona
Tel.: +34 977 83 87 11
Fax.: +34 977 83 87 70
E-Mail: servicio.cliente@fischer.es
http://www.fischer.es

Turkey
fischer Metal Sanayi Ve Ticaret Ltd Sti
Cevizli Mahallesi, Mustafa Kemal Paşa Cad. Seyit Gazi Sok.
No 66, Hukukçular Towers A Blok
34865 Kartal İstanbul
Tel.: +90 216 326 0066
Fax.: +90 216 326 0018
E-Mail: info@fischer.com.tr
http://www.fischer.com.tr

United Arab Emirates
fischer FZE
R/A 07, BA - 04, Jebel Ali Free Zone
Dubai
Tel.: +97 14 8 83 74 77
Fax.: +97 14 8 83 74 76
E-Mail: enquiry@fischer.ae
http://www.fischer.ae

Sweden
fischer Sverige AB
Tenngatan 4
602 23 Norrköping
Tel.: +46 11 31 44 52
Fax.: +46 11 33 1950
E-Mail: gg@fischersverige.se
http://www.fischersverige.se

United Kingdom
fischer fixings UK Ltd.
Whitely Road
Oxon OX10 9AT Wallingford
Tel.: +44 1491 82 79 00
Fax.: +44 1491 82 79 53
E-Mail: info@fischer.co.uk
http://www.fischer.co.uk

United States
fischer fixings LLC
1084 Doris Rd
48326 Auburn Hills, MI
Tel.: +1 973 256 3045
Fax.: +1 845 625 2666
E-Mail: sales@fischerus.net
http://fischerfixings.com

Article Index

article	page
Air conditioner fixing KSU	256
Air conditioner fixing MCE	254
Angle brace WS 31– 45°	70
Angle bracket MW and MWU	84
Angle bracket MW Clix 90°	82
Angle bracket PWK	109
Angle bracket WK hdg.	226
Base plate GPL	178
Base plate GPR	178
Beam Clamp Steel TKLS Steel Bite	174
Beam clamp TKR	133
Beam clamp TKR	146
Beam clamp TKR	248
Beam clamp TKR 31	87
Beam clamp TKR hdg.	230
Bolt connector SBB	184
Bracing elements PSAE	111
Bracket FAF hdg.	234
Bracket FFF	134
Bracket FFF hdg.	232
Bracket PFAF	114
Bracket PFFF	113
Bracket PFUF	115
Bracket PFUF D	116
Cable clasp KB	264
Cable harness SHA	266
Cable tie BN / UBN	284
Cantilever arm ALK	67
Cantilever arm ALK A2	243
Cantilever arm FCA	99
Cantilever arm FCA A4	245
Cantilever arm FCA hdg.	204
Ceramic fixings	292
Channel connector FUF OC	144
Channel connector FUF OC and PFUF OC	96
Channel connector FUF OC hdg.	203
Channel connector SV 31	72
Channel FLS	62
Channel FUS	90
Channel FUS	143
Channel FUS hdg.	198
Channel MS-L A2	243
Channel nut FCN	123
Channel nut FCN	148
Channel nut FCN Clix P	147
Channel nut FCSN	121
Channel nut HG A2	244
Channel washer HK 31	86
Channel washer HK 41	124
Channel washer HK 41	144
Channel washer HK 41	248
Channel washer HK 41 hdg.	223
Clamp hanger TKL	172
ClipFix plus LS/ES/ZS	260
ClipFix plus SD	262
Clix channel nut FCN Clix A4	249
Conduit clip BSM	280
Connector FCN Clix P and FCN Clix M	117
Connector FCN Clix P hdg. / FCN Clix M hdg.	221
Cover cap AK	69
Cover cap FEC	104
Cover cap FEC	147
Cover cap FEC	208
Cross connector FVS II	142
Double connector plate DPP, DPF	183
Eyebolt AG	188
FDCC	97
Flanges FUF hdg.	235
Flanges FZF	136
Flat eye screw LLS	188
FLS Cutting Tool	65
FUS Channel A2/A4	245
Heavy duty pipe clamp FRSM – inch	42
Heavy duty pipe clamp FRSM – metric	44
Hexagonal connector VM	146
Hexagonal connector VM A4	250
Hexagonal nut MU	145
Hexagonal nut MU	186
Hexagonal nut MU A4	251
Hexagonal nut MU hdg.	238
Hexagonal screw SKS	145
Hexagonal screw SKS	185
Hexagonal screw SKS A4	251
Hexagonal screw SKS hdg.	238
Hexagonal connector VM	186
Hinged pipe clamp FGRS	24
Hinged pipe clamp FGRS Plus	22
Hinged pipe clamp FKS Plus for plastic pipes	26
Hole punch LZ, hole stamp LST	167
Hose clamp SGS	58
Impact nail ED	191
Impact nail ED	282
Installation angle bracket MW A2	244
Installation tool for stud screw HED	184
Large cantilever arm FCAM	103
Large cantilever arm FCAM hdg.	207
LGS	164
Mounting bracket FAF	135
Mounting bracket FAF A4	246
Mounting bracket UWS	126
Mounting bracket UWS hdg.	225
Multi connector MW	181
Nail clip NS / MNS	274
Nail disc NSB	276
Parallel connector PV	182
Perforated steel banding LBV / LBK	190
Pipe clamp FRS	34
Pipe clamp FRS A2/A4	242
Pipe clamp FRS Plus	28
Pipe clamp FRS Triple	32
Pipe clamp FRS zl	196
Pipe clamp FRS-L Universal	30
Pipe clamp FRSN	40
Pipe clamp FRSN Triple	38
Pipe clip FC	270
Pipe clip RC	268
Push-through connector PFCN 41	105
Reduction pieces	187
Reduction socket RDM and GRD	188
Refrigeration pipe clamp FRS K	46
Refrigeration pipe clamp KFT	48
Rubber inlay EMS	168
Saddle clip SCH	272
Saddle flange PSF	107
Saddle flange SF	125
Saddle flange SF A2	244
Saddle flange SF Clix 31	80
Saddle flange SF hdg.	224
Saddle flange SF L A4	246
Sanitary fixings for board materials	290
Silicone pipe clamp FRSH	36
Sliding channel nut FSM Clix M	76
Sliding channel nut FSM Clix P	74
Sound absorption element PA	257
Spacer pipe clamp AM	278
Spiral duct hanger LRBN / LRB	165
Sprinkler clamp FRSL	54
Sprinkler clamp FRSP	52
Stud screw STS A2/A4	249
Stud screw STST with bit head and Hex shank	179
Support hanger AHB	180
Textile web strapping GWB	189
T-head bolt FHS Clix	78
T-head bolt FHS Clix A2	243
T-head bolt FHS Clix S	119
Thread hanger RAH	187
Threaded rod bracket FSB 45°	132
Threaded rod bracket FSB 45° hdg.	229
Threaded rod G	144
Threaded rod G / Threaded stud GS	176
Threaded rod G A2/A4	250
Threaded rod G hdg.	237
Threaded stud GS A4	250
Turnbuckle SPS, Bolt left-hand/ right-hand BLR	146
Turnbuckle SPS, Bolt left-hand / right-hand BLR	184
U-bolt ETR	51
U-Clamp FUBD	56
Universal bracket PUWS	108
Universal hinge FUH	130
Universal hinge FUH	147
Universal mounting UHRS	129
Variable bracket PVB	110
Variable bracket VB	131
Variable bracket VB hdg.	228
Ventilation duct clamp	162
Wash basin and urinal fixings	294
Washer U	145
Washer U	185
Washer U A4	251
Washer U mz	237
Wireclip	286

art.-no.	article	page
014319	VM M 6	186
014320	WDP 10 x 170	291
014570	ED 22	192
014570	ED 22	283
015014	BSM 6	281
015015	BSM 8	281
015016	BSM 10	281
015017	BSM 12	281
015018	BSM 14	281
015019	BSM 30	281
015021	BSM 42	281
015068	BSMD 10	281
015069	BSMD 12	281
015070	BSMD 14	281
015076	BSMD 26	281
015081	BSMD 42	281
015082	BSMD 47	281
015093	BSM 15	281
018652	WB 5N	293
019802	BN 3,6 x 200	285
020914	FHS CLIX S 8 x 30	120
020915	FHS CLIX S 8 x 40	120
020916	FHS CLIX S 8 x 60	120
020917	FHS CLIX S 10 x 30	120
020918	FHS CLIX S 10 x 40	120
020919	FHS CLIX S 10 x 60	120
020936	RD M 8 / M 6	187
020947	PV M 6	182
020949	TKL M 12	173
020956	G 6	176
020957	G 12	176
020958	G 16	176
020959	GWB	189
020968	GPS 3/4"	178
020969	FHS CLIX S 12 x 30	120
020971	VM M 12	146
020971	VM M 12	186
024415	ETR 8 - 13	51
024416	ETR 12 - 17	51
024417	ETR 15 - 21	51
024418	ETR 20 - 27	51
024419	ETR 26 - 34	51
024420	ETR 33 - 42	51
024421	ETR 40 - 49	51
024422	ETR 50 - 60	51
024423	ETR 60 - 70	51
024424	ETR 66 - 76	51
024425	ETR 70 - 82	51
024426	ETR 80 - 90	51
024427	ETR 90 - 102	51
024428	ETR 100 - 108	51
024429	ETR 102 - 114	51
024430	ETR 121 - 127	51
024431	ETR 126 - 133	51
024432	ETR 131 - 140	51
024433	ETR 143 - 153	51
024434	ETR 150 - 159	51
024435	ETR 168	51
024436	ETR 193,7	51
024437	ETR 219	51
024637	LGS 450	163
024638	LGS 500	163
024639	LGS 560	163
024640	LGS 600	163
024643	LGS 800	163
024644	LGS 900	163
024645	LGS 1000	163
024646	LGS 1120	163
024647	LGS 1250	163
024648	DPF 60 - 105	183
024649	U 12 x 40	145
024649	U 12 x 40	185
024650	MU M 12	145
024650	MU M 12	186
024671	LKH	164
024674	ZKH	164
024675	LRB	165
024827	SX 6 x 50	332
024828	SX 8 x 65	332
024829	SX 10 x 80	332
033208	PUP M3	336
033211	FIS HB 345 S	318
037289	GPR 1/2"	178
037489	BN 2,6 x 160	285
037490	BN 3,6 x 300	285
037501	BN 4,5 x 160	285
037573	UBN 3,6 x 200	285
037581	BN 4,8 x 178	285
037582	BN 4,8 x 250	285
037583	BN 4,8 x 370	285
037653	BN 4,8 x 350	285
037708	BN 4,8 x 430	285
037945	BN 7,8 x 180	285
037949	BN 7,8 x 300	285
037996	BN 7,6 x 450	285
037997	BN 7,6 x 550	285
037998	BN 8,8 x 760	285
038000	BN 8,8 x 810	285
038002	BN 8,8 x 1168	285
040390	FUS 41/2,0 - 2 m	91
040391	FUS 21/2,0 - 2 m	91
040398	GPS M 12	178
041900	FIS H 12 x 50 K	324
041901	FIS H 12 x 85 K	324
041902	FIS H 16 x 85 K	324
041903	FIS H 16 x 130 K	324
041904	FIS H 20 x 85 K	324
042535	FRS 15 - 19 M8/M10	35
042536	FRS 20 - 24 M8/M10	35
042537	FRS 25 - 30 M8/M10	35
042538	FRS 32 - 37 M8/M10	35
042554	FRS 40 - 45 M8/M10	35
042555	FRS 55 - 61 M8/M10	35
043275	TKL Ø 13	173
043365	Ersatzteilset für SZE	192
043365	Ersatzteilset für SZE	283
043631	FIS E 11 x 85 M6	324
043632	FIS E 11 x 85 M8	324
043633	FIS E 15 x 85 M10	324
043634	FIS E 15 x 85 M12	324
043994	FIS V 360 S	322
044109	FNA II 6 x 30 M6/5	316
044110	FNA II 6 x 30 M6 x 41	316
044111	FNA II 6 x 25 M6/5	316
044112	FNA II 6 x 30 M6/5 A4	316
044113	FNA II 6 x 30 M6/5 C	316
044114	FNA II 6 x 30 M8/5	316
044115	FNA II 6 x 30/5	315
044116	FNA II 6 x 30/30	315
044117	FNA II 6 x 30/50	315
044118	FNA II 6 x 30/75	315
044119	FNA II 6 x 30/100	315
044120	FNA II 6 x 30/120	315
044121	FNA II 6 x 25/5	315
044122	FNA II 6 x 30/5 A4	315
044123	FNA II 6 x 30/30 A4	315
044124	FNA II 6 x 30/5 C	315
044125	FNA II 6 x 30/30 C	315
044559	WIC 2 VE20	287
044560	WIC 2 VE100	287
044561	WIC 3 VE20	287
044564	WIC 4 VE50	287
044565	WI Ø 2 mm	287
044630	EHS M 6 x 25/30 Plus	314
044631	EHS M 8 x 25/30 Plus	314
044632	EHS M 8 x 40 Plus	314
044633	EHS M 10 x 40 Plus	314
044634	EHS M 12 x 50 Plus	314
044635	EHS M 16 x 65 Plus	314
044636	EHS M 20 x 80 Plus	314
044721	WIZ	287
044969	FIS A M 10 x 170	321
044971	FIS A M 12 x 120	321
044972	FIS A M 16 x 130	321
044973	FIS A M 10 x 170 A4	321
044974	FIS A M 12 x 120 A4	321
044975	FIS A M 16 x 130 A4	321
045517	SGS 9 W2 8 - 12	58
045518	SGS 9 W2 10 - 16	58
045519	SGS 9 W2 12 - 20	58
045520	SGS 9 W2 16 - 27	58
045521	SGS 9 W2 20 - 32	58
045522	SGS 9 W2 25 - 40	58
045523	SGS 9 W2 32 - 50	58
045524	SGS 9 W2 40 - 60	58
045525	SGS 9 W2 50 - 70	58
045526	SGS 9 W2 60 - 80	58
045527	SGS 9 W2 70 - 90	58
045528	SGS 9 W2 80 -100	58
045529	SGS 9 W2 90 -110	58
045530	SGS 9 W2 100 -120	58
045531	SGS 9 W2 110 -130	58
045532	SGS 9 W2 120 -140	58
045685	Thermax 8/60 M6	328
045686	Thermax 8/80 M6	328
045687	Thermax 8/100 M6	328
045688	Thermax 8/120 M6	328
045689	Thermax 8/140 M6	328
045690	Thermax 8/160 M6	328
045691	Thermax 8/180 M6	328
045692	Thermax 10/100 M6	328
045693	Thermax 10/120 M6	328
045694	Thermax 10/140 M6	328
045695	Thermax 10/160 M6	328
045696	Thermax 10/180 M6	328
045697	Thermax 10/100 M8	328

Article Index

art.-no.	article	page
045698	Thermax 10/120 M8	328
045699	Thermax 10/140 M8	328
045700	Thermax 10/160 M8	328
045702	Thermax 10/100 M10	328
045703	Thermax 10/120 M10	328
045704	Thermax 10/140 M10	328
045705	Thermax 10/160 M10	328
045956	WIS 2/1	287
045957	WIS 2/2	287
045958	WIS 2/3	287
045959	WIS 2/5	287
045960	WIS 2/10	287
046022	FNA II 6 x 30 M6/10	316
046024	FNA II 6 x 30/50 A4	315
046204	FIS A M 6 x 70	323
046329	SXR 10 x 60 FUS	326
046330	SXR 10 x 80 FUS	326
046331	SXR 10 x 100 FUS	326
046332	SXR 10 x 120 FUS	326
046333	SXR 10 x 140 FUS	326
046334	SXR 10 x 160 FUS	326
046335	SXR 10 x 180 FUS	326
046336	SXR 10 x 200 FUS	326
046337	SXR 10 x 230 FUS	326
046338	SXR 10 x 260 FUS	326
046339	SXR 10 x 60 FUS A4	326
046340	SXR 10 x 80 FUS A4	326
046342	SXR 10 x 100 FUS A4	326
046343	SXR 10 x 120 FUS A4	326
046344	SXR 10 x 140 FUS A4	326
046345	SXR 10 x 160 FUS A4	326
046361	SXR 10 x 180 FUS A4	326
046362	SXR 10 x 200 FUS A4	326
046363	SXR 10 x 230 FUS A4	326
046364	SXR 10 x 260 FUS A4	326
046632	FAZ II 20/30	304
046633	FAZ II 20/60	304
046635	FAZ II 24/30	304
046636	FAZ II 24/60	304
046703	FIS H 20 x 130 K	324
046704	FIS H 20 x 200 K	324
047303	FZEA II 10 x 40 M 8	307
047304	FZEA II 12 x 40 M10	307
047305	FZEA II 14 x 40 M12	307
047306	FZEA II 10 x 40 M 8 A4	307
047307	FZEA II 12 x 40 M10 A4	307
047308	FZEA II 14 x 40 M12 A4	307
047309	FZEA II 10 x 40 M 8 C	307
047310	FZEA II 12 x 40 M10 C	307
047316	FHS CLIX S 12 x 40	120
047726	SBS 12/16	155
048065	EMS M 6 x 25/30	314
048066	EMS M 8 x 25/30	314
048067	EMS M 8 x 40	314
048068	EMS M 10 x 25/30	314
048070	EMS M 10 x 40	314
048071	EMS M 12 x 50	314
048072	EMS M 16 x 65	314
048073	EMS M 20 x 80	314
048151	SF plus ES 10	261
048152	SF plus ES 18	261
048154	SS-TKL M10/M12	173
048161	SF plus ZS 18	261
048162	SF plus ZS 28	261
048171	SF plus KB 8	265
048172	SF plus KB 16	265
048181	SF plus MS	267
048190	SF plus RC IEC 12	269
048191	SF plus RC IEC 16	269
048193	SF plus RC IEC 20	269
048197	SF plus RC IEC 25	269
048198	SF plus RC IEC 32	269
048199	SF plus RC IEC 40	269
048212	ED 15	192
048212	ED 15	283
048264	EA II M 6 x 30	313
048284	EA II M 8 x 30	313
048308	NSB 2/40	277
048309	NSB 2/50	277
048310	NSB 2/60	277
048311	NSB 3/40	277
048312	NSB 3/50	277
048313	NSB 3/60	277
048323	EA II M 8 x 40	313
048332	EA II M 10 x 30	313
048339	EA II M 10 x 40	313
048406	EA II M 12 x 50	313
048408	EA II M 16 x 65	313
048409	EA II M 20 x 80	313
048410	EA II M 6 x 30 A4	313
048411	EA II M 8 x 30 A4	313
048412	EA II M 8 x 40 A4	313
048414	EA II M 10 x 40 A4	313
048415	EA II M 12 x 50 A4	313
048416	EA II M 16 x 65 A4	313
048417	EA II M 20 x 80 A4	313
048487	EHS M 10 x 25/30 Plus	314
048510	FFPS 2"	153
048511	FFPS 2 1/2"	153
048512	FFPS 3"	153
048513	FFPS 4"	153
048660	FFPS 5"	153
048662	FFPS 159 - 166	153
048663	FFPS 6"	153
048664	FFPS 8"	153
048665	FFPS 10"	153
048666	FFPK	153
049103	DDK TR (DE/EN)	335
049459	FRSN 15 - 19 M8/M10	41
049479	UWS	126
049789	FRSN 21 - 23 M8/M10	41
049790	FRSN 25 - 28 M8/M10	41
049793	FRSN 32 - 36 M8/M10	41
049794	FRSN 38 - 43 M8/M10	41
049902	FRSN 44 - 49 M8/M10	41
049922	FRSN 50 - 56 M8/M10	41
049944	FRSN 57 - 61 M8/M10	41
049945	FRSN 63 - 70 M8/M10	41
049947	FRSN 70 - 77 M8/M10	41
049948	FRSN 80 - 83 M8/M10	41
049979	FRSN 83 - 91 M8/M10	41
050006	FRSN 100 - 106 M8/M10	41
050008	FRSN 108 - 114 M8/M10	41
050009	FRSN 123 - 128 M8/M10	41
050010	FRSN 131 - 136 M8/M10	41
050023	FRSN 137 - 146 M8/M10	41
050326	KM 10	291
050427	PU 750 B3 (EN/FR/AR)	333
051290	Thermax 12/110 M12 B	329
051291	Thermax 12/110 M12	329
051292	Thermax 16/170 M12 B	329
051293	Thermax 16/170 M12	329
051537	Thermax 12/110 M12 A4	329
051543	Thermax 16/170 M12 A4	329
052370	FHB II-A L M20 x 210/150	320
052456	FFC 2/30-32	343
052480	FFC 2/38-40	343
052481	FFC 2/55	343
052482	FFC 2/63	343
052483	FFC 2/75	343
052486	FFC 2/82	343
052487	FFC 2/90	343
052488	FFC 2/110	343
052489	FFC 2/125	343
052500	FFC 2/160	343
052501	FFC 2/200	343
053011	FiAM 310 (DE,FR,EN,NL)	341
053085	PUR 500 (DE/EN)	336
053090	DBSA TP (DE/EN)	334
053091	DBSA W (DE/EN)	334
053092	DBSA GR (DE/EN)	334
053094	DBSA SW (DE/EN)	334
053100	DSSA TP (DE/EN)	334
053101	DSSA W (DE/EN)	334
053102	DSSA GR (DE/EN)	334
053103	DSSA BG (DE/EN)	334
053105	DSSA DG (DE/EN)	334
053115	KP M1	336
053117	KP M2	341
053120	DSSA SW (DE/EN)	334
056006	FiAM 600	341
058120	RC IEC 16	269
058122	RC IEC 20	269
058135	KB 8	265
058136	KB 16	265
058139	SHA 15	267
058140	SHA 30	267
058141	SHA MS	267
058142	SHA KP	267
058155	SF plus LS 3/13	261
058156	SF plus LS 8/28	261
058157	SF plus LS 20/40	261
058173	NS 7	275
058174	NS 8	275
058175	NS 9	275
058176	NS 10	275
058177	NS 12	275
058178	SF plus SD 30	263
058179	SF plus SD 40	263
058183	SF plus ES 28	261
058184	SF plus ZS 10	261
058194	RC IEC 12	269
058198	RC IEC 25	269
058199	RC IEC 32	269
058200	RC IEC 40	269
058501	PUP 750 B3 (EN)	333

art.-no.	article	page
058530	DSSA SG (DE/EN)	334
060012	SCH 812	273
060016	SCH 1216	273
060019	FAZ 12/30 GS	273
060023	SCH 1623	273
060032	SCH 2332	273
060042	SCH 3242	273
060149	BSM 16	281
060150	BSM 18	281
060151	BSM 20	281
060152	BSM 22	281
060153	BSM 24	281
060155	BSM 28	281
060158	BSM 37	281
060169	BSMD 16	281
060170	BSMD 18	281
060171	BSMD 20	281
060172	BSMD 22	281
060175	BSMD 28	281
060178	BSMD 37	281
060185	AM 8	279
060186	AM 10	279
060187	AM 12	279
060188	AM 14	279
060189	AM 16	279
060190	AM 18	279
060191	AM 20	279
060192	AM 22	279
060193	AM 24	279
060194	AM 26	279
060195	AM 28	279
060196	AM 30	279
060200	BU M8 MH	296
060201	BU M10 MH	296
060204	BU M12 MH	296
060209	AM 32	279
060210	AM 34	279
060211	AM 37	279
060561	WCN 1	293
060562	WCN 2	293
060564	S 8 D 70 WCR	293
060568	S 8 RD 80 WCR	293
060570	S 8 RD 60 WCR	293
060652	FZA 12 x 50 M 8 D/10	306
060653	FZA 12 x 60 M 8 D/10	306
060654	FZA 12 x 80 M 8 D/30	306
060657	FZA 14 x 80 M10 D/20	306
060658	FZA 14 x 100 M10 D/40	306
060663	FZA 22 x 125 M16 D/25	306
060664	FZA 12 x 50 M 8 D/10 A4	306
060665	FZA 12 x 60 M 8 D/10 A4	306
060666	FZA 12 x 80 M 8 D/30 A4	306
060669	FZA 14 x 80 M10 D/20 A4	306
060670	FZA 14 x 100 M10 D/40 A4	306
060672	FZA 18 x 100 M12 D/20 A4	306
060673	FZA 18 x 130 M12 D/50 A4	306
060675	FZA 22 x 125 M16 D/25 A4	306
060684	FZA 18 x 100 M12 D/20	306
060685	FZA 18 x 130 M12 D/50	306
060712	FZA 10 x 40 M 6/10	306
060715	FZA 12 x 40 M 8/15	306
060716	FZA 12 x 50 M 8/15	306
060718	FZA 14 x 40 M10/25	306
060719	FZA 14 x 60 M10/25	306
060721	FZA 18 x 80 M12/25	306
060724	FZA 22 x 100 M16/60	306
060725	FZA 22 x 125 M16/60	306
060766	FZA 14 x 60 M10/50 A4	306
060767	FZA 18 x 80 M12/55 A4	306
060768	FZA 22 x 125 M16/60 A4	306
060772	FZA 10 x 40 M 6/10 A4	306
060774	FZA 12 x 50 M 8/50 A4	306
060775	FZA 12 x 40 M 8/15 A4	306
060776	FZA 12 x 50 M 8/15 A4	306
060778	FZA 14 x 40 M10/25 A4	306
060779	FZA 14 x 60 M10/25 A4	306
060781	FZA 18 x 80 M12/25 A4	306
060782	FZA 22 x 100 M16/60 A4	306
062754	UX 6 x 35	331
062756	UX 6 x 35 R	331
062757	UX 14 x 75	331
062758	UX 12 x 70	331
063490	FRSH 15 - 19	37
063492	FRSH 20 - 24	37
063494	FRSH 25 - 30	37
063495	FRSH 32 - 37	37
063498	FRSH 40 - 45	37
063499	FRSH 48 - 53	37
063500	FRSH 54 - 59	37
063502	FRSH 60 - 64	37
063504	FRSH 68 - 73	37
063505	FRSH 72 - 78	37
063511	FRSH 80 - 86	37
063513	FRSH 87 - 92	37
063518	FRSH 95 - 103	37
063520	FRSH 102 - 116	37
063537	FRSH 133 - 141	37
063559	WK 100/100	127
063938	UHRS	129
064037	PDH M 12	158
064038	GLL 3/4"	154
064041	GL 3/4"	154
064055	TKL L M 8	173
064056	G 12/3	144
064056	G 12/3	176
064090	SPS M 12	146
064090	SPS M 12	184
064091	BLR 100 M12	146
064091	BLR 100 M12	184
064093	G 1/2"	176
064094	TZ M 8	166
064095	TZ M 10	166
064290	FRS 3/8" A2	242
064536	FRS 1/2" A2	242
064639	FRS 3/4" A2	242
064646	FRS 1" A2	242
064669	FRS 1 1/4" A2	242
064673	FRS 1 1/2" A2	242
064674	FRS 54 - 58 A2	242
064675	FRS 2" A2	242
064688	FRS 67 - 71 A2	242
064689	FRS 2 1/2" A2	242
064693	FRS 81 - 86 A2	242
064694	FRS 3" A2	242
064695	FRS 95 - 103 A2	242
064697	FRS 4" A2	242
064709	FRS 121 - 127 A2	242
064713	FRS 133 - 141 A2	242
064714	FRS 159 - 168 A2	242
064864	FRS 3/8" A4	242
064865	FRS 1/2" A4	242
064866	FRS 3/4" A4	242
064868	FRS 1" A4	242
064869	FRS 1 1/4" A4	242
064870	FRS 1 1/2" A4	242
064873	FRS 54 - 58 A4	242
064874	FRS 2" A4	242
064875	FRS 67 - 71 A4	242
064879	FRS 2 1/2" A4	242
064892	FRS 81 - 86 A4	242
064893	FRS 3" A4	242
064894	FRS 95 - 103 A4	242
064898	FRS 4" A4	242
064899	FRS 121 - 127 A4	242
064901	FRS 133 - 141 A4	242
064903	FRS 159 - 168 A4	242
064905	MS 27/18 A2 - 2 m	243
064975	FHS CLIX 10 x 30 A2	243
064977	HG 27 M 10 A2	244
065101	ALK 27/18 - 200 A2	243
065132	STS 8 x 80 A2	249
065153	STS 10 x 100 A2	249
065173	G 10 A2	250
065174	G 10 A4	250
068012	SCH 812 GR	273
068016	SCH 1216 GR	273
068019	SCH 1619 GR	273
068023	SCH 1623 GR	273
068032	SCH 2332 GR	273
068060	FC 6 - 9 GR	271
068062	FC 9 - 12 GR	271
068064	FC 12 - 16 GR	271
068066	FC 16 - 20 GR	271
068267	PDH K M 8	158
068269	PDH K M 10	158
068435	FIS V 360 S	322
069363	UBN 2,6 x 160	285
069364	UBN 3,6 x 300	285
069365	UBN 4,5 x 160	285
069366	UBN 4,8 x 178	285
069367	UBN 4,8 x 250	285
069368	UBN 4,8 x 350	285
069369	UBN 4,8 x 370	285
069370	UBN 4,8 x 430	285
069372	UBN 7,8 x 180	285
069373	UBN 7,8 x 300	285
069374	UBN 7,6 x 450	285
069375	UBN 7,6 x 550	285
069376	UBN 8,8 x 760	285
069377	UBN 8,8 x 810	285
069379	UBN 8,8 x 1168	285
070004	SX 4 x 20	332
070005	SX 5 x 25	332
070006	SX 6 x 30	332
070008	SX 8 x 40	332
070010	SX 10 x 50	332

Article Index

art.-no.	article	page
070012	SX 12 x 60	332
070014	SX 14 x 70	332
070016	SX 16 x 80	332
070021	SX 6 x 30 S/10	332
070022	SX 8 x 40 S/20	332
071269	FSB 45°	132
072094	UX 6 x 50	331
072095	UX 6 x 50 R	331
077347	FUS 41/2,5 - 3 m	143
077347	FUS 41/2,5 - 3 m	91
077349	FUS 21/2,5 - 3 m	91
077355	FEC 41 B	104
077355	FEC 41 B	147
077355	FEC 41 B	208
077357	FEC 21 B	104
077357	FEC 21 B	147
077357	FEC 21 B	208
077359	FCA 41 - 300	100
077361	FCA 41 - 450	100
077363	FCA 41 - 600	100
077365	FCA 41 - 750	100
077405	FCN 6	123
077407	FCN 8	123
077409	FCN 10	123
077411	FCN 12	123
077411	FCN 12	148
077537	FUS 41/2,5 - 6 m	143
077537	FUS 41/2,5 - 6 m	91
077541	FUS 21/2,5 - 6 m	91
077580	G 3/4"	176
077605	TKL L Ø 9	173
077606	GRD 3/4" / M 12	188
077607	GRD 3/4" / M 10	188
077608	GRD 1/2" / M 12	188
077609	GRD 1/2" / M 10	188
077613	LRBN	165
077615	SF L 27 A2	244
077625	MW 27-90° A2	244
077626	MW 27-45° A2	244
077634	FHS CLIX 8 x 30 A2	243
077636	HG 27 M 8 A2	244
077641	MU M 10 A4	251
077642	MU M 8 A4	251
077643	STS 8 x 100 A2	249
077644	G 8 A2	250
077645	G 8 A4	250
077689	STST 10 x 60	179
077707	STST 10 x 80	179
077708	STST 10 x 100	179
077709	STST 10 x 120	179
077711	STST 10 x 140	179
077712	STST 10 x 180	179
077714	STST 6 x 80	179
077715	STS 8 x 100 A4	249
077716	STS 10 x 100 A4	249
077869	UX 8 x 50	331
077870	UX 8 x 50 R	331
077871	UX 10 x 60	331
077872	UX 10 x 60 R	331
077937	FABS	305
078177	BS ø 8	337
078178	BS ø 10	337
078179	BS ø 12	337
078180	BS ø 14	337
078181	BS ø 16/18	337
078182	BS ø 24	337
078183	BS ø 28	337
078184	BS ø 35	337
078185	SX 6 x 50 R	332
079194	RC IEC 50	269
079196	RC IEC 63	269
079400	FGRS Plus 12 - 14	23
079401	FGRS Plus 15 - 19	23
079402	FGRS Plus 20 - 24	23
079403	FGRS Plus 25 - 30	23
079404	FGRS Plus 32 - 37	23
079405	FGRS Plus 40 - 44	23
079406	FGRS Plus 45 - 50	23
079407	FGRS Plus 50 - 55	23
079408	FGRS Plus 56 - 63	23
079413	RDM M 10 / M 8	188
079414	RDM M 12 / M 10	188
079415	SKS 8 x 16	185
079416	SKS 10 x 20	185
079417	SKS 10 x 30	185
079420	FGRS 12 - 14	25
079421	FGRS 15 - 19	25
079422	FGRS 20 - 24	25
079423	FGRS 25 - 30	25
079424	FGRS 32 - 37	25
079425	FGRS 40 - 44	25
079426	FGRS 45 - 50	25
079427	FGRS 50 - 55	25
079428	FGRS 56 - 63	25
079430	FGRS Plus 12 - 14 M8/M10	23
079431	FGRS Plus 15 - 19 M8/M10	23
079432	FGRS Plus 20 - 24 M8/M10	23
079433	FGRS Plus 25 - 30 M8/M10	23
079434	FGRS Plus 32 - 37 M8/M10	23
079435	FGRS Plus 40 - 44 M8/M10	23
079436	FGRS Plus 45 - 50 M8/M10	23
079437	FGRS Plus 50 - 55 M8/M10	23
079438	FGRS Plus 56 - 63 M8/M10	23
079440	FRS Plus 12 - 15	29
079441	FRS Plus 15 - 19	29
079442	FRS Plus 20 - 24	29
079443	FRS Plus 25 - 30	29
079444	FRS Plus 32 - 37	29
079445	FRS Plus 40 - 45	29
079446	FRS Plus 48 - 54	29
079447	FRS Plus 55 - 61	29
079449	FRS Plus 63 - 67	29
079450	FRS Plus 68 - 73	29
079451	FRS Plus 72 - 80	29
079452	FRS Plus 80 - 86	29
079453	FRS Plus 87 - 92	29
079454	FRS Plus 95 - 103	29
079455	FRS Plus 108 - 116	29
079456	FRS 121 - 128 M8/M10	35
079457	FRS 133 - 141 M8/M10	35
079458	FRS 159 - 165 M8/M10	35
079459	FRS 165 - 168 M8/M10	35
079470	FKS Plus 15 - 19	27
079471	FKS Plus 20 - 24	27
079472	FKS Plus 25 - 30	27
079473	FKS Plus 32 - 37	27
079474	FKS Plus 40 - 44	27
079475	FKS Plus 45 - 50	27
079476	FKS Plus 50 - 55	27
079477	FKS Plus 56 - 63	27
079491	LGS 80	163
079492	LGS 90	163
079493	LGS 100	163
079494	LGS 112	163
079495	LGS 125	163
079496	LGS 140	163
079497	LGS 150	163
079498	LGS 160	163
079499	LGS 180	163
079500	LGS 200	163
079501	LGS 224	163
079502	LGS 250	163
079503	LGS 280	163
079504	LGS 300	163
079505	LGS 315	163
079506	LGS 355	163
079507	LGS 400	163
079535	BSMZ 20	281
079536	BSMZ 24	281
079537	BSMZ 28	281
079549	LBV 12	190
079550	LBV 17	190
079551	LBV 25	190
079553	LBK 14	190
079554	LBK 19	190
079555	LBK 27	190
079570	WK 200/200	127
079571	WK 207/165	127
079665	GPL M 8	178
079666	GPL M 10	178
079667	GPL 1/2"	178
079671	GPS M 10	178
079672	GPS 1/2"	178
079675	AHB	180
079676	PDH M 8	158
079677	PDH M 10	158
079678	PV M 8	182
079680	SB M 8	157
079681	SB M 10	157
079685	SBS M 8	155
079686	SBS M 10	155
079687	TKL M 8	173
079688	TKL M 10	173
079689	TKL Ø 11	173
079690	VM M 8	186
079691	VM M 10	186
079692	RD M 10 / M 8	187
079693	RD M 12 / M 10	187
079694	RD M 6 / M 8	187
079695	RD 1/2" / M10	187
079696	AG 8 x 25	186
079697	AG 10 x 25	186
079698	RAH M 8	187
079699	RAH M 10	187
079700	LLS 6 x 50	188
079701	LLS 8 x 50	188

art.-no.	article	page
079702	DPP 65	183
079703	DPP 85	183
079704	DPP 105	183
079705	SBB 35	184
079706	SBB 45	184
079707	SBB 55	184
079711	SKS 6 x 20	185
079713	SKS 8 x 30	185
079714	SKS 8 x 45	185
079715	SKS 8 x 55	185
079717	MW M 8	181
079721	SKS 10 x 55	185
079725	U 8 x 28	185
079726	U 10 x 28	185
079729	U 8 x 40	185
079730	U 10 x 40	185
079733	MU M 6	186
079734	MU M 8	186
079735	MU M 10	186
079740	G 8	176
079741	G 8/2	176
079744	G 10	176
079745	G 10/2	176
079750	GS 8/25	176
079751	GS 8/40	176
079752	GS 8/50	176
079753	GS 8/60	176
079754	GS 8/70	176
079755	GS 8/80	176
079757	GS 8/100	176
079758	GS 8/150	176
079759	GS 8/200	176
079765	GS 10/25	176
079766	GS 10/40	176
079767	GS 10/60	176
079768	GS 10/80	176
079769	GS 10/100	177
079770	GS 10/120	177
079771	GS 10/150	177
079772	GS 10/200	177
079780	STST 8 x 50	179
079781	STST 8 x 60	179
079782	STST 8 x 80	179
079783	STST 8 x 100	179
079784	STST 8 x 120	179
079785	STST 8 x 140	179
079786	STST 8 x 180	179
079815	ED 18	192
079815	ED 18	283
079820	SZE	192
079820	SZE	283
079825	TZH M 8	166
079826	TZH M 10	166
079827	SKS 8 x 100	185
079829	LST 10	167
079830	LZ	167
079831	HED	184
079831	HED	296
080650	WL 10 x 80	296
080651	WL 7 x 60	296
080652	WL 8 x 70	296
080654	BO 120	295
080655	WD 10 x 120	295
080656	WD 10 x 140	295
080658	WD 8 x 110	295
080659	WD 8 x 90	295
080660	WST 10 x 140	295
080661	WST 12 x 150	295
080662	WST 12 x 180	295
080668	UST 10 x 120	295
080951	AKM 10 CR	296
080952	AKM 12 CR	296
080972	AKM 10 W	296
083578	UST 8 x 110	295
087478	BN 2,5 x 100	285
087479	BN 2,5 x 120	285
087480	BN 2,5 x 200	285
087481	BN 3,6 x 150	285
087484	BN 4,6 x 200	285
087485	BN 4,8 x 280	285
087487	BN 7,6 x 350	285
087488	UBN 2,5 x 100	285
087489	UBN 2,5 x 120	285
087490	UBN 2,5 x 200	285
087491	UBN 3,6 x 150	285
087494	UBN 4,6 x 200	285
087495	UBN 4,8 x 280	285
087497	UBN 7,6 x 350	285
089300	Ausbläser groß AB G	337
090243	FIS A M 6 x 75	323
090272	FIS A M 6 x 85	323
090273	FIS A M 6 x 110	323
090274	FIS A M 8 x 90	321
090275	FIS A M 8 x 110	321
090276	FIS A M 8 x 130	321
090277	FIS A M 8 x 175	321
090278	FIS A M 10 x 110	321
090279	FIS A M 10 x 130	321
090281	FIS A M 10 x 150	321
090282	FIS A M 10 x 200	321
090283	FIS A M 12 x 140	321
090284	FIS A M 12 x 160	321
090285	FIS A M 12 x 180	321
090286	FIS A M 12 x 210	321
090287	FIS A M 12 x 260	321
090288	FIS A M 16 x 175	321
090289	FIS A M 16 x 200	321
090290	FIS A M 16 x 250	321
090291	FIS A M 16 x 300	322
090292	FIS A M 20 x 245	322
090293	FIS A M 20 x 290	322
090294	FIS A M 24 x 290	322
090295	FIS A M 24 x 380	322
090297	FIS A M 30 x 430	322
090437	FIS A M 6 x 75 A4	323
090439	FIS A M 6 x 110 A4	323
090440	FIS A M 8 x 90 A4	321
090441	FIS A M 8 x 110 A4	321
090442	FIS A M 8 x 130 A4	321
090443	FIS A M 8 x 175 A4	321
090444	FIS A M 10 x 110 A4	321
090447	FIS A M 10 x 130 A4	321
090448	FIS A M 10 x 150 A4	321
090449	FIS A M 10 x 200 A4	321
090450	FIS A M 12 x 140 A4	321
090451	FIS A M 12 x 160 A4	321
090452	FIS A M 12 x 180 A4	321
090453	FIS A M 12 x 210 A4	321
090454	FIS A M 12 x 260 A4	321
090455	FIS A M 16 x 175 A4	321
090456	FIS A M 16 x 200 A4	321
090457	FIS A M 16 x 250 A4	321
090458	FIS A M 16 x 300 A4	322
090459	FIS A M 20 x 245 A4	322
090460	FIS A M 20 x 290 A4	322
090461	FIS A M 24 x 290 A4	322
090462	FIS A M 24 x 380 A4	322
090464	FIS A M 30 x 430 A4	322
090839	BSM 25	281
090840	BSM 32	281
090841	BSM 40	281
090842	BSM 50	281
090843	BSM 63	281
090844	BSMD 25	281
090845	BSMD 32	281
090846	BSMD 40	281
090847	BSMD 50	281
090848	BSMD 63	281
090849	AM 40	279
090850	AM 50	279
090851	AM 63	279
091442	GS 12/40	177
091443	GS 12/60	177
091444	GS 12/80	177
091461	GS 12/100	177
091462	GS 12/120	177
091463	GS 12/150	177
091464	GS 12/200	177
091477	U 8 x 17	185
091478	U 10 x 21	185
091488	FRS 63 - 67 M8/M10	35
091489	FRS 72 - 80 M8/M10	35
091505	FRS 87 - 92 M8/M10	35
091506	FRS 108 - 116 M8/M10	35
091507	FRSH 159 - 168	37
092295	FUS 41/2,5 - 2 m	91
092867	FUS 21/2,5 - 2 m	91
092960	FCSN M 8 x 30	122
092961	FCSN M 8 x 40	122
093354	FCSN M 8 x 50	122
093355	FCSN M 8 x 60	122
093360	FCSN M 10 x 30	122
093361	FCSN M 10 x 40	122
093362	FCSN M 10 x 50	122
093363	FCSN M 10 x 60	122
093366	FCSN M 12 x 30	122
093367	FCSN M 12 x 40	122
093700	FRSM 1 1/2" M10/M12	45
093701	FRSM 53 - 58 M10/M12	45
093702	FRSM 2" M10/M12	45
093703	FRSM 2 1/2" M10/M12	45
093704	FRSM 3" M10/M12	45
093705	FRSM 102 M10/M12	45
093707	FRSM 4" M10/M12	45
093709	FRSM 124 - 129 M10/M12	45
093710	FRSM 131 - 137 M10/M12	45

art.-no.	article	page
093711	FRSM 138 - 145 M10/M12	45
093712	FRSM 156 - 162 M10/M12	45
093713	FRSM 165 - 171 M10/M12	45
093714	FRSM 188 - 194 M10/M12	45
093715	FRSM 196 - 203 M10/M12	45
094404	FIS V 360 S	322
094405	FIS V 360 S	322
094673	MNS 4-7	275
094674	MNS 7-11	275
094675	MNS 10-14	275
094721	UX 5 x 30	331
094722	UX 5 x 30 R	331
094758	UX 6 x 35 R S/20	331
094759	UX 6 x 50 R S/20	331
094760	UX 8 x 50 R S/25	331
094761	UX 10 x 60 S/20	331
094762	UX 8 x 50 R S/15	331
094871	FAZ II 8/10	303
094877	FAZ II 8/30	303
094878	FAZ II 8/50	303
094879	FAZ II 8/100	303
094981	FAZ II 10/10	303
094982	FAZ II 10/20	303
094983	FAZ II 10/30	303
094984	FAZ II 10/50	303
094985	FAZ II 10/80	303
094986	FAZ II 10/100	303
095419	FAZ II 12/10	303
095420	FAZ II 12/20	303
095421	FAZ II 12/30	303
095446	FAZ II 12/50	303
095454	FAZ II 12/80	303
095470	FAZ II 12/100	303
095605	FAZ II 12/200	303
095836	FAZ II 16/25	304
095864	FAZ II 16/50	304
095865	FAZ II 16/100	304
095967	FAZ II 16/200	304
095968	FAZ II 16/250	304
096188	FAZ II 16/300	304
096497	FIS AC	336
096824	FHB II-P 8 x 60	318
096843	FHB II-P 10 x 95	318
096844	FHB II-P 12 x 120	318
096845	FHB II-P 16 x 160	318
096846	FHB II-P 20 x 210	318
096847	FHB II-P 10 x 60	318
096848	FHB II-P 12 x 75	318
096849	FHB II-P 16 x 95	318
096851	FHB II-P 24 x 170	318
096907	FHB II-A L M10 x 95/10	320
096940	FHB II-A L M10 x 95/20	320
096941	FHB II-A L M10 x 95/60	320
096942	FHB II-A L M10 x 95/100	320
096943	FHB II-A L M12 x 120/10	320
096944	FHB II-A L M12 x 120/25	320
096958	BSM 26	281
097014	FHB II-A L M12 x 120/60	320
097031	FHB II-A L M12 x 120/100	320
097032	FHB II-A L M8 x 60/10	320
097033	FHB II-A L M8 x 60/30	320
097034	FHB II-A L M8 x 60/50	320
097035	FHB II-A L M16 x 160/30	320
097038	FHB II-A L M16 x 160/60	320
097070	FHB II-A L M16 x 160/100	320
097071	FHB II-A L M20 x 210/50	320
097072	FHB II-A S M10 x 60/10	319
097073	FHB II-A S M10 x 60/20	319
097074	FHB II-A S M10 x 60/60	319
097206	FHB II-A S M10 x 60/100	319
097257	FHB II-A S M12 x 75/10	319
097268	FHB II-A S M12 x 75/25	319
097274	FHB II-A S M12 x 75/60	319
097275	FHB II-A S M12 x 75/100	319
097280	FHB II-A S M12 x 75/165	319
097281	FHB II-A S M16 x 95/30	319
097286	FHB II-A S M16 x 95/60	319
097295	FHB II-A S M16 x 95/100	319
097296	FHB II-A S M16 x 95/165	319
097297	FHB II-A S M24 x 170/50	319
097298	FHB II-A L M8 x 60/10 A4	320
097299	FHB II-A L M8 x 60/30 A4	320
097440	FHB II-A L M8 x 60/50 A4	320
097616	FHB II-A L M10 x 95/10 A4	320
097617	FHB II-A L M10 x 95/20 A4	320
097618	FHB II-A L M10 x 95/40 A4	320
097619	FHB II-A L M10 x 95/60 A4	320
097620	FHB II-A L M10 x 95/100 A4	320
097621	FHB II-A L M12 x 120/10 A4	320
097622	FHB II-A L M12 x 120/25 A4	320
097623	FHB II-A L M12 x 120/40 A4	320
097624	FHB II-A L M12 x 120/60 A4	320
097625	FHB II-A L M12 x 120/100 A4	320
097626	FHB II-A L M16 x 160/30 A4	320
097627	FHB II-A L M16 x 160/60 A4	320
097628	FHB II-A L M16 x 160/100 A4	320
097629	FHB II-A L M20 x 210/50 A4	320
097630	FHB II-A S M10 x 60/10 A4	319
097631	FHB II-A S M10 x 60/20 A4	319
097632	FHB II-A S M10 x 60/40 A4	319
097633	FHB II-A S M10 x 60/60 A4	319
097634	FHB II-A S M10 x 60/100 A4	319
097635	FHB II-A S M12 x 75/10 A4	319
097636	FHB II-A S M12 x 75/25 A4	319
097637	FHB II-A S M12 x 75/40 A4	319
097638	FHB II-A S M12 x 75/60 A4	319
097639	FHB II-A S M12 x 75/100 A4	319
097640	FHB II-A S M12 x 75/165 A4	319
097641	FHB II-A S M16 x 95/30 A4	319
097642	FHB II-A S M16 x 95/60 A4	319
097643	FHB II-A S M16 x 95/100 A4	319
097644	FHB II-A S M16 x 95/165 A4	319
097645	FHB II-A S M24 x 170/50 A4	319
097658	FUS 41/2,0 - 3 m	143
097658	FUS 41/2,0 - 3 m	91
097659	FUS 41/2,0 - 6 m	143
097659	FUS 41/2,0 - 6 m	91
097660	FUS 21/2,0 - 3 m	91
097661	FUS 21/2,0 - 6 m	91
097696	FHB II-A L M8 x 60/10 C	320
097699	FHB II-A L M10 x 95/20 C	320
097700	FHB II-A L M12 x 120/25 C	320
097702	FHB II-A L M16 x 160/30 C	320
097703	FHB II-A L M20 x 210/50 C	320
097704	FHB II-A S M10 x 60/10 C	319
097706	FHB II-A S M12 x 75/25 C	319
097708	FHB II-A S M16 x 95/30 C	319
097967	Pistole 600 ml	341
098011	PU 1/750 B3 HandHeld (EN/FR)	333
098012	PUP 750 B3 GunGrade (EN/FR)	333
500542	FHB II-PF 8 x 60	318
500543	FHB II-PF 10 x 95	318
500544	FHB II-PF 12 x 120	318
500545	FHB II-PF 16 x 160	319
500546	FHB II-PF 20 x 210	319
500547	FHB II-PF 10 x 60	318
500548	FHB II-PF 12 x 75	318
500549	FHB II-PF 16 x 95	319
500550	FHB II-PF 24 x 170	319
500569	FNA II 6 x 30/50 C	315
500573	FNA II 6 x 30/75 C	315
500574	FNA II 6 x 30/100 C	315
500575	FNA II 6 x 30/120 C	315
500698	FRS Triple 15 - 19	33
500699	FRS Triple 21 - 23	33
500700	FRS Triple 26 - 28	33
500701	FRS Triple 32 - 35	33
500702	FRS Triple 40 - 43	33
500703	FRS Triple 48 - 56	33
500704	FRS Triple 57 - 62	33
500705	FRS Triple 63 - 70	33
500706	FRS Triple 74 - 80	33
500707	FRS Triple 83 - 91	33
500708	FRS Triple 100 - 105	33
500709	FRS Triple 108 - 114	33
500710	FRS Triple 115 - 125	33
500711	FRS Triple 127 - 135	33
500712	FRS Triple 135 - 140	33
500713	FRS Triple 159 - 169	33
500714	FRSN Triple 15 - 19	39
500715	FRSN Triple 21 - 23	39
500716	FRSN Triple 26 - 28	39
500717	FRSN Triple 32 - 35	39
500718	FRSN Triple 40 - 43	39
500719	FRSN Triple 48 - 56	39
500720	FRSN Triple 57 - 62	39
500721	FRSN Triple 63 - 70	39
500722	FRSN Triple 74 - 80	39
500723	FRSN Triple 83 - 91	39
500724	FRSN Triple 100 - 105	39
500725	FRSN Triple 108 - 114	39
500744	FRSN 118 - 122 M8/M10	41
500746	FRSN 146 - 156 M8/M10	41
500747	FRSN 159 - 165 M10/M12	41
500748	FRSN 166 - 175 M10/M12	41
500751	FRSN 200 - 206 M10/M12	41
500752	FRSN 210 - 219 M10/M12	41
501396	FAZ II 8/10 A4	303
501399	FAZ II 8/30 A4	303
501401	FAZ II 8/50 A4	303
501403	FAZ II 10/10 A4	303
501406	FAZ II 10/20 A4	303
501407	FAZ II 10/30 A4	303
501409	FAZ II 10/50 A4	303
501410	FAZ II 10/70 A4	303
501411	FAZ II 10/100 A4	303

art.-no.	article	page
501412	FAZ II 10/160 A4	303
501413	FAZ II 12/10 A4	303
501415	FAZ II 12/20 A4	303
501416	FAZ II 12/30 A4	303
501419	FAZ II 12/50 A4	303
501420	FAZ II 12/60 A4	303
501421	FAZ II 12/100 A4	303
501423	FAZ II 16/25 A4	304
501424	FAZ II 16/50 A4	304
501425	FAZ II 16/100 A4	304
501426	FAZ II 20/30 A4	304
501427	FAZ II 24/30 A4	304
501428	FAZ II 8/10 C	303
501429	FAZ II 8/30 C	303
501430	FAZ II 10/10 C	303
501431	FAZ II 12/30 C	303
501432	FAZ II 16/25 C	304
502283	FIS V 360 S	322
502456	SXR 10 x 52 FUS	326
503180	FAZ II 12/160 A4	303
503183	FAZ II 20/60 A4	304
503184	FAZ II 24/60 A4	304
503185	FAZ II 10/30 C	303
503186	FAZ II 12/10 C	303
503187	FAZ II 16/50 C	304
503251	FAZ II 8/160	303
503252	FAZ II 10/160	303
503253	FAZ II 12/160	303
503254	FAZ II 16/160	304
503255	FAZ II 20/160	304
504315	FCA 62 - 1000	100
504317	FCA 41D - 750	100
504319	FCA 41D - 1000	100
504320	FHS CLIX S 12 x 60	120
504326	FCN Clix P 6	118
504327	FCN Clix P 8	118
504329	FCN Clix P 10	118
504331	FCN Clix P 12	118
504331	FCN Clix P 12	147
504344	FCN Clix M 6	118
504345	FCN Clix M 8	118
504346	FCN Clix M 10	118
504347	FCN Clix M 12	118
504355	SF L 41	125
504357	SF L 82	125
504358	SF L 124	125
504363	TKR 21 - 42	133
504366	TKR 82	133
504367	TKR 124	133
504367	TKR 124	146
504368	FFF 4D	134
504375	FZF 21	136
504376	FUF 21	136
504377	FUF 41	136
504378	FUF 4Y	137
504379	FUF 180°L	137
504383	FUF 180°R	137
504387	FUF 8T	137
504397	RD M 12 / M 16	187
504399	RD M 16 / M 12	187
504400	STST 6 x 60	179
504408	GPS M 16	178
504436	FCN Clix P 8 A4	249
504437	FCN Clix P 10 A4	249
504439	FCN Clix P 12 A4	249
504440	FCN Clix M 8 A4	249
504447	FCN Clix M 10 A4	249
504457	FUS 62/2,5 - 6 m	143
504457	FUS 62/2,5 - 6 m	91
504458	FUS 21D/2,0 - 3 m	143
504458	FUS 21D/2,0 - 3 m	91
504459	FUS 41D/2,5 - 6 m	143
504459	FUS 41D/2,5 - 6 m	91
504460	FUS 62D/2,5 - 6 m	143
504460	FUS 62D/2,5 - 6 m	91
504466	FUS 21/2,0 A2 - 2 m	245
504468	FUS 41/2,0 A2 - 2 m	245
504470	FUS 41/2,5 A2 - 2 m	245
504472	FUS 21/2,0 A4 - 2 m	245
504474	FUS 41/2,0 A4 - 2 m	245
504475	FUS 41/2,5 A4 - 2 m	245
504476	TKR 21 - 42 A4	248
504477	FCAM 300	103
504479	FCAM 400	103
504480	FCAM 500	103
504482	FCAM 600	103
504498	FFF 3L	134
504500	FFF 4T	134
504515	FZF 41	136
504517	FUF OC 41	96
504518	FUF OC 62	96
504518	FUF OC 62	144
504522	SF L 41 A4	246
504589	FRSM 1/2" M10/M12	45
504590	FRSM 3/4" M10/M12	45
504591	FRSM 1" M10/M12	45
504592	FRSM 1 1/4" M10/M12	45
504593	FRSM 79 - 85 M10/M12	45
504594	FRSM 348 - 356 M16	45
504595	FRSM 364 - 372 M16	45
504596	FRSM 400 - 409 M16	45
504597	FRSM 454 - 462 M16	45
504598	FRSM 500 - 508 M16	45
505453	FRSM 212 M12/M16	45
505454	FRSM 8" M12/M16	45
505455	FRSM 250 M12/M16	45
505456	FRSM 10" M12/M16	45
505457	FRSM 300 M12/M16	45
505458	FRSM 12" M12/M16	45
505460	FCAM 700	103
505483	UX 8 x 40 R	331
505487	FCA 41 A4 - 300	245
505488	FCA 41 A4 - 450	245
505489	FCA 41 A4 - 600	245
505536	GS 8/40 A4	250
505537	GS 8/60 A4	250
505538	GS 10/40 A4	250
505539	GS 10/60 A4	250
505540	VM M8 A4	250
505541	VM M10 A4	250
505542	U 8 x 28 A4	251
505543	U 8 x 40 A4	251
505544	U 10 x 28 A4	251
505545	U 10 x 40 A4	251
505546	U 12 x 24 A4	251
505547	SKS M 10 x 30 A4	251
505548	SKS M 12 x 30 A4	251
505551	FEC 62 B	104
505551	FEC 62 B	147
505551	FEC 62 B	208
505552	SKS 10 x 85	185
505553	SKS 12 x 85	145
505553	SKS 12 x 85	185
505576	KFT 9,5	49
505577	KFT 12,7	49
505578	KFT 15,8	49
505579	KFT 17,2	49
505580	KFT 18,0	49
505581	KFT 19,5	49
505582	KFT 21,3	49
505583	KFT 22,0	49
505584	KFT 26,9	49
505585	KFT 28,0	49
505587	KFT 33,7	49
505588	KFT 35,0	49
505589	KFT 40,0	49
505591	KFT 41,2	49
505592	KFT 42,4	49
505593	KFT 44,5	49
505594	KFT 48,3	49
505595	KFT 50,0	49
505596	KFT 54,0	49
505597	KFT 57,0	49
505598	KFT 60,3	49
505599	KFT 64,0	49
505901	KFT 70,0	49
505902	KFT 74,0	49
505903	KFT 76,1	49
505904	KFT 80,0	49
505905	KFT 84,0	49
505906	KFT 88,9	49
505907	KFT 92,1	49
505908	KFT 101,0	49
505909	KFT 104,0	49
505910	KFT 108,0	49
505911	KFT 114,3	49
505914	KFT 129,0	49
505915	KFT 133,0	49
505916	KFT 139,7	50
505917	KFT 154,0	50
505918	KFT 159,0	50
505919	KFT 168,3	50
505920	KFT 193,7	50
505921	KFT 204,0	50
505922	KFT 219,1	50
506486	FRS K 12/13	47
506487	FRS K 15/13	47
506488	FRS K 17-18/13	47
506489	FRS K 21-22/13	47
506490	FRS K 27-28/13	47
506491	FRS K 34-35/13	47
506492	FRS K 42/13	47
506493	FRS K 48-49/13	47
506494	FRS K 60/13	47
506495	FRS K 12/19	47
506496	FRS K 15/19	47

Article Index

art.-no.	article	page
506497	FRS K 17-18/19	47
506498	FRS K 21-22/19	47
506499	FRS K 27-28/19	47
506500	FRS K 34-35/19	47
506501	FRS K 42/19	47
506502	FRS K 48-49/19	47
506503	FRS K 60/19	47
506504	FRS K 64/19	47
506505	FRS K 70/19	47
506506	FRS K 76/19	47
506508	FRS K 89/19	47
506509	FRS K 102/19	47
506510	FRS K 108/19	47
506511	FRS K 114/19	47
506884	FHB II-A S M10 x 75/10	319
506885	FHB II-A S M10 x 75/20	319
506886	FHB II-A S M10 x 75/60	319
506887	FHB II-A S M10 x 75/100	319
506888	FHB II-A S M10 x 75/10 A4	319
506889	FHB II-A S M10 x 75/20 A4	319
506890	FHB II-A S M10 x 75/40 A4	319
506891	FHB II-A S M10 x 75/60 A4	319
506892	FHB II-A S M10 x 75/100 A4	319
506893	FHB II-A L M12 x 100/10	320
506894	FHB II-A L M12 x 100/25	320
506895	FHB II-A L M12 x 100/60	320
506896	FHB II-A L M12 x 100/100	320
506897	FHB II-A L M12 x 100/10 A4	320
506898	FHB II-A L M12 x 100/25 A4	320
506899	FHB II-A L M12 x 100/40 A4	320
506901	FHB II-A L M12 x 100/60 A4	320
506902	FHB II-A L M12 x 100/100 A4	320
506903	FHB II-A L M16 x 125/30	320
506904	FHB II-A L M16 x 125/60	320
506905	FHB II-A L M16 x 125/100	320
506906	FHB II-A L M16 x 125/30 A4	320
506909	FHB II-A L M16 x 125/60 A4	320
506910	FHB II-A L M16 x 125/100 A4	320
506911	FHB II-A L M16 x 145/30	320
506912	FHB II-A L M16 x 145/60	320
506913	FHB II-A L M16 x 145/100	320
506914	FHB II-A L M16 x 145/30 A4	320
506915	FHB II-A L M16 x 145/60 A4	320
506916	FHB II-A L M16 x 145/100 A4	320
506917	FHB II-A S M20 x 170/50	319
506919	FHB II-A S M20 x 170/50 A4	319
506920	FHB II-A L M24 x 210/50	320
506921	FHB II-A L M24 x 210/50 A4	320
507699	FRS K 54/13	47
507700	FRS K 54/19	47
507786	FRS K 133/19	47
507787	FRS K 139/19	47
507788	FRS K 168/19	47
507866	FSC 1	156
507922	FHB II-P 12 x 100	318
507923	FHB II-P 16 x 125	318
507924	FHB II-P 16 x 145	318
507925	FHB II-P 20 x 170	318
507926	FHB II-P 24 x 210	318
507999	FHB II-PF 10 x 75	318
508000	FHB II-PF 12 x 100	318
508001	FHB II-PF 16 x 125	319
508002	FHB II-PF 16 x 145	319
508003	FHB II-PF 20 x 170	319
508004	FHB II-PF 24 x 210	319
508016	FHB II-P 10 x 75	318
508833	VM M 16	186
509214	FIS A M 8 x 1000	321
509215	FIS A M 10 x 1000	321
509216	FIS A M 12 x 1000	321
509217	FIS A M 16 x 1000	322
509223	FIS A M 10 x 1000 8.8	321
509224	FIS A M 12 x 1000 8.8	321
509225	FIS A M 16 x 1000 8.8	322
509230	FIS A M 8 x 1000 A4	321
509231	FIS A M 10 x 1000 A4	321
509232	FIS A M 12 x 1000 A4	321
509233	FIS A M 16 x 1000 A4	322
509241	FTC-ZA (EN/FR/ES/PT)	335
509242	FTC-ZS (EN/FR/ES/PT)	335
510969	FRS 12 - 15 M8/M10	35
510970	FRS 48 - 54 M8/M10	35
510992	FIS DM S-L	336
511118	FIS DM S	336
512208	DSSA FUG (DE/EN)	334
512209	DSSA SAG (DE/EN)	334
512210	DSSA MA (DE/EN)	334
512211	DSSA AN (DE/EN)	334
512401	FIS DP S-XL	336
512605	Thermax 10/200 M6	328
512709	KSU S 440	257
512710	KSU S 520	257
512711	KSU S 600	257
512712	KSU 440	257
512713	KSU 520	257
512714	KSU 600	257
512715	PA 30 x 30	257
512716	FSFP 1"	152
512717	FSFP 1 1/4"	152
512718	FSFP 1 1/2"	152
512719	FSFP 2"	152
512720	FSFP 2 1/2"	152
512721	FSFP 3"	152
512722	FSFP 4"	152
513302	FRSL 34	55
513303	FRSL 43	55
513304	FRSL 49	55
513307	FRSL 60	55
513308	FRSL 76	55
513309	FRSL 90	55
513310	FRSL 115	55
513311	FRSL 140	55
513312	FRSL 170	55
513429	PUP M4 BLACK	336
514250	Thermax 10/220 M6	328
514251	Thermax 10/240 M6	328
514252	Thermax 10/180 M8	328
514253	Thermax 10/200 M8	328
514254	Thermax 10/220 M8	328
514255	Thermax 10/240 M8	328
514256	Thermax 10/180 M10	328
514257	Thermax 10/200 M10	328
514258	Thermax 10/220 M10	328
514259	Thermax 10/240 M10	328
516537	LKHN	164
516540	ZKHN	164
517411	FCA 41 - 300 fvz	205
517412	FCA 41 - 450 fvz	205
517413	FCA 41 - 600 fvz	205
517414	FCA 41 - 750 fvz	205
517415	FUF OC 41 fvz	203
517420	FCN Clix P 12 fvz	222
517421	SF L 41 fvz	224
517426	FUS 41/2,0 - 3 m fvz	199
517427	FUS 62/2,5 - 3 m fvz	199
517428	FUS 62/2,5 - 6 m fvz	199
517598	DKM-290 ML (DE/EN)	334
517599	DKM-290 ML (DE/EN)	334
517600	DKM-290 ML schwarz (DE/EN)	334
517935	FIS A M 10 x 150 8.8	321
517936	FIS A M 10 x 190 8.8	321
517937	FIS A M 12 x 160 8.8	321
517938	FIS A M 12 x 200 8.8	321
517939	FIS A M 16 x 200 8.8	321
517940	FIS A M 16 x 250 8.8	321
518831	FIS SB 390 S	321
519021	FPX M6-I	317
519022	FPX M8-I	317
519023	FPX M10-I	317
519024	FPX M12-I	317
519390	FIS A M 8 x 90 8.8	321
519391	FIS A M 8 x 110 8.8	321
519392	FIS A M 8 x 130 8.8	321
519393	FIS A M 8 x 175 8.8	321
519395	FIS A M 10 x 170 8.8	321
519396	FIS A M 10 x 200 8.8	321
519397	FIS A M 12 x 120 8.8	321
519398	FIS A M 12 x 140 8.8	321
519399	FIS A M 12 x 180 8.8	321
519400	FIS A M 16 x 130 8.8	321
519401	FIS A M 16 x 175 8.8	321
519402	FIS A M 16 x 300 8.8	322
519404	FIS A M 20 x 245 8.8	322
519406	FIS A M 20 x 290 8.8	322
519410	FIS A M 20 x 1000 8.8	322
519421	FIS A M 12 x 200 A4	321
519427	FIS A M 20 x 1000 A4	322
519450	FIS SB 390 S	321
519451	FIS SB 390 S	321
519452	FIS SB 585 S	321
519665	FIS HB 150 C	318
520471	U-Scheibe für FBS II 10	309
520526	FIS SB 585 S	321
520555	FIS SB 390 S	321
520557	FIS SB 390 S	321
520559	FIS SB 390 S	321
520593	FIS UMR	321
520595	FIS SB 390 S	321
521431	FIS V 410 C	322
521760	KLIMA EASY KLIK	255
521761	KLIMA KLIK 420	255
522108	FAZ II 10/10 K	305
522110	FAZ II 10/20 K	305
522115	FAZ II 10/10 K GS	305
522116	FAZ II 10/10 K A4	305
522117	FAZ II 10/20 K A4	305

art.-no.	article	page
522118	FAZ II 12/10 K	305
522119	FAZ II 12/20 K	305
522121	FAZ II 12/10 K GS	305
522122	FAZ II 12/10 K A4	305
522123	FAZ II 12/20 K A4	305
522124	FAZ II 16/5	303
522125	FAZ II 16/5 A4	303
522517	Setzwerkzeug FPX M6 I	317
522518	Setzwerkzeug FPX M8-M12 I	317
522719	SXRL 10 x 80 FUS	327
522720	SXRL 10 x 100 FUS	327
522721	SXRL 10 x 120 FUS	327
522723	SXRL 10 x 140 FUS	327
522724	SXRL 10 x 160 FUS	327
522725	SXRL 10 x 180 FUS	327
522726	SXRL 10 x 200 FUS	327
522727	SXRL 10 x 230 FUS	327
522728	SXRL 10 x 260 FUS	327
522729	SXRL 10 x 290 FUS	327
522730	SXRL 10 x 80 FUS A4	327
522731	SXRL 10 x 100 FUS A4	327
522732	SXRL 10 x 120 FUS A4	327
522733	SXRL 10 x 140 FUS A4	327
522734	SXRL 10 x 160 FUS A4	327
522735	SXRL 10 x 180 FUS A4	327
522736	SXRL 10 x 200 FUS A4	327
522737	SXRL 10 x 230 FUS A4	327
522738	SXRL 10 x 260 FUS A4	327
522739	SXRL 10 x 290 FUS A4	327
523303	FIS SB HIGH SPEED 390 S	321
524035	FRSP 1/2"	53
524036	FRSP 3/4"	53
524037	FRSP 1"	53
524038	FRSP 1 1/4"	53
524039	FRSP 1 1/2"	53
524040	FRSP 2"	53
524041	FRSP 2 1/2"	53
524042	FRSP 3"	53
524043	FRSP 4"	53
524044	FRSP 5"	53
524045	FRSP 6"	53
524046	FRSP 8"	53
524047	TZA M10	166
524170	FIS A M 10 x 130 8.8	321
530946	SXRL 14 x 80 FUS	327
530947	SXRL 14 x 100 FUS	327
530948	SXRL 14 x 120 FUS	327
530949	SXRL 14 x 140 FUS	327
530950	SXRL 14 x 160 FUS	327
530951	SXRL 14 x 180 FUS	327
530952	SXRL 14 x 200 FUS	327
530953	SXRL 14 x 230 FUS	327
530954	SXRL 14 x 260 FUS	327
530955	SXRL 14 x 80 FUS A4	327
530956	SXRL 14 x 100 FUS A4	327
530957	SXRL 14 x 120 FUS A4	327
530958	SXRL 14 x 140 FUS A4	327
530959	SXRL 14 x 160 FUS A4	327
530960	SXRL 14 x 180 FUS A4	327
530961	SXRL 14 x 200 FUS A4	327
530962	SXRL 14 x 230 FUS A4	327
530963	SXRL 14 x 260 FUS A4	327
531134	TKLS Ø 9	175
531136	TKLS Ø 11	175
531137	TKLS Ø 13	175
531138	TKLS Ø 17	175
531573	FIS V 300 T	322
532230	EA II M 6 x 25	313
532231	EA II M 8 x 25	313
532232	EA II M 10 x 25	313
532233	EA II M 12 x 25	313
532568	EHS M 12 x 25 Plus	314
532607	EBB 8 x 25	313
532608	EBB 10 x 25	313
532609	EBB 12 x 25	313
532610	EBB 15 x 25	313
533159	FMB T40 Maxx Bit W 5	309
533731	PUWS 2 x 2/135°	108
533733	PUWS 2 x 2	108
533734	PUWS 4 x 4	108
533735	PFAF 2	114
533736	PFAF 3	114
533737	PFAF 4/135°	114
533738	PFUF 41	115
533739	PFCN 41	105
533740	PSF 41	107
533741	PSF 82	107
533742	PSF 124	107
533743	PFUF OC	96
533744	PWK 200/200	109
533745	PFFF 2L	113
533830	DKM-290 ML transparent (DE/EN)	334
533881	FIS A M 24 x 1000 5.8	322
534880	FIS V 410 C	322
534960	PVB	110
535266	PSFQ 41	107
535267	PFAF 4	114
535268	PFFF 4I	113
535269	PSAE 300 Stütze	112
535270	PSAE 500 Stütze	112
535271	PU 10,5 U-Scheibe	112
535272	PU 12,5 U-Scheibe	112
535273	PFUF 3DL	116
535274	PFUF 3DR	116
535275	PFUF 4D	116
535494	FRSM 3/8"	43
535497	FRSM 1/2"	43
535498	FRSM 3/4"	43
535499	FRSM 1"	43
535500	FRSM 1 1/4"	43
535501	FRSM 1 1/2"	43
535502	FRSM 2"	43
535503	FRSM 2 1/2"	43
535504	FRSM 3"	43
535505	FRSM 110 mm	43
535506	FRSM 4"	43
535507	FRSM 133 mm	43
535508	FRSM 5"	43
535509	FRSM 160 mm	43
535511	FRSM 6"	43
535531	FUS 21D/2,0 - 6 m	143
535531	FUS 21D/2,0 - 6 m	91
535532	MU M 20	186
535534	MU M 24	186
535535	GS 8/120	176
535536	GS 8/180	176
535537	SKS 10 x 65	185
535538	SKS 12 x 25	145
535538	SKS 12 x 25	185
535539	SKS 12 x 65	145
535539	SKS 12 x 65	185
535540	U 16 x 40	185
535541	STST 12 x 100	179
535542	STST 12 x 160	179
536851	FBS II 8x55 5/- US TX	307
536852	FBS II 8x70 20/5 US TX	307
536853	FBS II 8x80 30/15 US TX	307
536854	FBS II 8x90 40/25 US TX	307
536855	FBS II 8x100 50/35 US TX	307
536856	FBS II 8x110 60/45 US TX	307
536857	FBS II 8x130 80/65 US TX	307
536858	FBS II 10x60 5/-/- US	307
536859	FBS II 10x70 15/5/- US	307
536860	FBS II 10x80 25/15/- US	307
536861	FBS II 10x90 35/25/5 US	308
536862	FBS II 10x100 45/35/15 US	308
536863	FBS II 10x120 65/55/35 US	308
536864	FBS II 10x140 85/75/55 US	308
536865	FBS II 10x160 105/95/75 US	308
536866	FBS II 10x200 145/135/115 US	308
536867	FBS II 10x230 175/165/145 US	308
536868	FBS II 10x260 205/195/175 US	308
536869	FBS II 12x70 10/-/- US	308
536870	FBS II 12x85 25/10/- US	308
536871	FBS II 12x110 50/35/10 US	308
536872	FBS II 12x130 70/55/30 US	308
536873	FBS II 12x150 90/75/50 US	308
536874	FBS II 14x75 10/-/- US	308
536875	FBS II 14x95 30/10/- US	308
536876	FBS II 14x100 35/15/- US	308
536877	FBS II 14x125 60/40/10 US	308
536878	FBS II 14x150 85/65/35 US	308
536880	FBS II 8x60 10/- SK	308
536881	FBS II 8x80 30/15 SK	308
536882	FBS II 8x90 40/25 SK	308
536884	FBS II 10x65 10/-/- SK	308
536885	FBS II 10x80 25/15/- SK	308
536886	FBS II 10x95 40/30/10 SK	308
536887	FBS II 10x100 45/35/15 SK	308
536888	FBS II 10x120 65/55/35 SK	308
536978	FCA 21D - 300	100
536979	FCA 21D - 450	100
536980	FCA 21D - 600	100
537065	FHB II-A L M12 x 100/50 GS A4	320
537149	FIS VL 300 T mit Clip	325
537200	Prüfhülse FUP 8	309
537201	Prüfhülse FUP 10	309
537202	Prüfhülse FUP 12	309
537203	Prüfhülse FUP 14	309
537207	FCA 21 - 200	100
537208	FCA 21 - 300	100
537209	FCA 21 - 450	100
537210	BLR 100 M10	184
537211	SPS M 10	184
537212	FGRS 8 - 11	25
537213	RD 3/4" / M 12 lang	187

Article Index

art.-no.	article	page
537214	RD 3/4" / M 16 lang	187
537215	RD 1/2" / M 10 lang	187
537581	FFF 3L fvz	233
537583	FFF 4T fvz	233
537584	FFF 4D fvz	233
537585	FUF 4Y fvz	236
537586	FUF 180°L fvz	236
537587	FUF 180°R fvz	236
537588	FUF 21 fvz	235
537589	FUF 41 fvz	235
537590	FUF 8T fvz	236
537591	FUF OC 62 fvz	203
537653	FUS 21/2,0 - 3 m fvz	199
537656	FUS 41/2,0 - 6 m fvz	199
537658	FUS 41/2,5 - 6 m fvz	199
537659	FUS 21D/2,0 - 3 m fvz	199
537661	FUS 21D/2,0 - 6 m fvz	199
537662	FUS 41D/2,5 - 6 m fvz	199
537663	FUS 62D/2,5 - 6 m fvz	199
537680	SKS 12 x 25 fvz	238
537681	SKS 10 x 25 fvz	238
537682	U 8 x 28 fvz	237
537683	U 10 x 21 fvz	237
537684	U 10 x 40 fvz	237
537685	U 12 x 24 fvz	237
537686	U 12 x 40 fvz	237
537687	MU M8 fvz	238
537688	MU M10 fvz	238
537689	MU M12 fvz	238
537690	MU M16 fvz	238
537691	G 8 zl	237
537694	G 10 fvz	237
537695	G 12 fvz	237
537696	G 16 fvz	237
537981	FRS 12 - 15 M8/M10 zl	197
537982	FRS 15 - 19 M8/M10 zl	197
537983	FRS 20 - 24 M8/M10 zl	197
537984	FRS 25 - 30 M8/M10 zl	197
537985	FRS 32 - 37 M8/M10 zl	197
537986	FRS 40 - 45 M8/M10 zl	197
537987	FRS 48 - 54 M8/M10 zl	197
537988	FRS 55 - 61 M8/M10 zl	197
537989	FRS 63 - 67 M8/M10 zl	197
537990	FRS 72 - 80 M8/M10 zl	197
537991	FRS 87 - 92 M8/M10 zl	197
537992	FRS 108 - 116 M8/M10 zl	197
537993	FRS 121 - 128 M8/M10 zl	197
537994	FRS 133 - 141 M8/M10 zl	197
537995	FRS 159 - 165 M8/M10 zl	197
537996	FRS 165 - 168 M8/M10 zl	197
538015	FCA 62 - 1000 fvz	205
538016	FCA 41D - 750 fvz	205
538017	FCA 41D - 1000 fvz	205
538018	FCAM 300 fvz	207
538019	FCAM 400 fvz	207
538020	FCAM 500 fvz	207
538021	FCAM 600 fvz	207
538022	FCAM 700 fvz	207
538080	RD M 16 / M 12 lang	187
538082	FRSL 34 M8	55
538083	FRSL 43 M8	55
538084	FRSL 49 M8	55
538085	FRSL 60 M8	55
538106	FCN Clix P 8 fvz	222
538107	FCN Clix P 10 fvz	222
538108	FCN Clix M 8 fvz	222
538109	FCN Clix M 10 fvz	222
538110	FCN Clix M 12 fvz	222
538115	UWS fvz	225
538117	WK 100/100 fvz	226
538118	WK 200/200 fvz	226
538120	FSB 45° fvz	229
538122	TKR 21- 42 fvz	230
538123	TKR 82 fvz	230
538124	TKR 124 fvz	230
538125	SF L 82 fvz	224
538126	SF L 124 fvz	224
538131	FIS V 410 C	322
538150	FiAM 310 (TR,PT,ES,IT)	341
538151	FiAM 310 (PL,SK,CZ,HU)	341
538152	FiAM 310 (DK,FI,SE,NO)	341
538240	DUOPOWER 6 x 50	330
538241	DUOPOWER 8 x 65	330
538242	DUOPOWER 10 x 80	330
538243	DUOPOWER 12 x 60	330
538244	DUOPOWER 14 x 70	330
538245	DUOPOWER 6 x 50 S	330
538246	DUOPOWER 8 x 65 S	330
538247	DUOPOWER 10 x 80 S	330
538248	DUOPOWER 12 x 60 S	330
538249	DUOPOWER 14 x 70 S	330
538458	FFD 26 x 12 x 6	309
538459	FFD 30 x 14 x 6	309
538460	FFD 38 x 19 x 7	309
538549	FIS VL 410 C im Eimer	325
538574	FPB Profi-Bit T50 5/16"	309
538575	Stecknuss TX40	309
538576	Stecknuss TX50	309
538578	Stecknuss SW13	309
538579	Stecknuss SW15	309
538580	Stecknuss SW17	309
538581	Stecknuss SW21	309
538583	FIS VL 300 T mit Clip	325
538584	FIS VL 410 C	325
538585	FIS VL 300 T HIGH SPEED mit Clip	325
538586	FIS VL 410 C HIGH SPEED	325
538589	FIS VL 300 T HWK groß	325
538590	FIS VL 410 C HWK groß	325
538641	SV 31	73
538643	FSM Clix P 6	75
538647	FSM Clix P 8	75
538649	FSM Clix P 10	75
538650	FSM Clix M 6	77
538651	FSM Clix M 8	77
538652	FSM Clix M 10	77
538653	FHS CLIX 8 x 30	79
538654	FHS CLIX 8 x 40	79
538655	FHS CLIX 8 x 60	79
538656	FHS CLIX 8 x 80	79
538657	FHS CLIX 8 x 100	79
538658	FHS CLIX 10 x 30	79
538659	FHS CLIX 10 x 40	79
538660	FHS CLIX 10 x 60	79
538661	FHS CLIX 10 x 100	79
538663	HK 31 8,5	86
538664	HK 31 10,5	86
538665	SF Clix 31	81
538666	MW Clix 90°	83
538667	MWU 90°	85
538668	MW 90°	85
538738	ALK 17-200	67
538739	ALK 17-300	67
538740	ALK 30-200	67
538741	ALK 30-300	67
538742	ALK 30-450	67
538743	ALK 37-300	67
538744	ALK 37-450	67
538745	ALK 37-600	67
538746	AK 17	69
538747	AK 30	69
538748	AK 37	69
538749	WS 31-45°	71
538751	TKR 31	87
538752	EMS 31	168
538753	FLS 17/1.0 - 2 m	63
538754	FLS 17/1.0 - 3 m	63
538755	FLS 30/1.0 - 2 m	63
538756	FLS 30/1.0 - 3 m	63
538757	FLS 37/1.2 - 2 m	63
538758	FLS 37/1.2 - 3 m	63
538759	FLS 37/1.2 - 6 m	63
538989	FAZ II 8/5 K	305
538990	FAZ II 8/5 K A4	305
539443	FRS-L 8 - 11 Universal	31
539444	FRS-L 12 - 15 Universal	31
539445	FRS-L 16 - 19 Universal	31
539446	FRS-L 20 - 24 Universal	31
539447	FRS-L 25 - 30 Universal	31
539448	FRS-L 31 - 37 Universal	31
539449	FRS-L 38 - 45 Universal	31
539450	FRS-L 46 - 52 Universal	31
539451	FRS-L 53 - 59 Universal	31
539452	FRS-L 60 - 66 Universal	31
539453	FRS-L 67 - 75 Universal	31
539454	FRS-L 76 - 84 Universal	31
539455	FRS-L 85 - 93 Universal	31
539456	FRS-L 94 - 100 Universal	31
539457	FRS-L 101 - 110 Universal	31
539459	FRS-L 111 - 119 Universal	31
539461	FIS VL 300 T	325
539462	FIS VL 300 T im Eimer	325
539463	FIS VL 410 C	325
539464	FIS VL 410 C im Eimer	325
539477	FRS K 219/19	47
539564	FUBD 40	57
539566	FUBD 52	57
539567	FUBD 60	57
539568	FUBD 76	57
539569	FUBD 94	57
539570	FUBD 100	57
539609	FCC	345
540084	DBSA ANG (DE/EN)	334
541441	KP M3	336
541712	HTM WH 290 (DE/EN)	335
541987	FFD 30 x 14 x 6 A4	309
542621	FAZ II 6/10	303

art.-no.	article	page
542622	FAZ II 6/20	303
542623	FAZ II 6/10 A4	303
542624	FAZ II 6/20 A4	303
542708	PUWS 2 x 2/135° zl	212
542709	PUWS 2 x 2 zl	212
542710	PUWS 4 x 4 zl	212
542711	PFAF 2 zl	218
542712	FPAF 3 zl	218
542713	FPAF 4/135° zl	218
542714	PFUF 41 zl	219
542715	PSF 41 zl	211
542716	PSF 82 zl	211
542718	PSF 124 zl	211
542719	PFUF OC zl	203
542720	PWK 200/200 zl	213
542721	PFFF 2L zl	217
542722	PVB zl	214
542723	PSFQ 41 zl	211
542724	PFAF 4 zl	218
542725	PFFF 4l zl	217
542726	PSAE zl 300 Stütze	216
542727	PSAE zl 500 Stütze	216
542728	PU zl 10,5 U-Scheibe	216
542729	PU zl 12,5 U-Scheibe	216
542730	PFUF 3DL zl	220
542731	PFUF 3DR zl	220
542732	PFUF 4D zl	220
542733	PFCN 41 zl	209
542735	FUS 21/2,0 A2 - 6 m	245
542736	FUS 41/2,0 A2 - 6 m	245
542737	FUS 41/2,5 A2 - 6 m	245
542738	FUS 21/2,0 A4 - 6 m	245
542739	FUS 41/2,0 A4 - 6 m	245
542740	FUS 41/2,5 A4 - 6 m	245
542960	LGS 630	163
542962	LGS 710	163
543060	FVS 3 II	142
543063	FVS 4 II	142
543065	FUH 13	130
543065	FUH 13	147
543565	FBS II 8x60 10/- US A4	310
543566	FBS II 8x70 5/- US A4	310
543567	FBS II 8x80 15/- US A4	310
543568	FBS II 8x90 25/- US A4	310
543569	FBS II 10x60 5/-/- US A4	310
543570	FBS II 10x70 15/5/- US A4	310
543571	FBS II 10x80 25/15/- US A4	310
543572	FBS II 10x90 5/- US A4	310
543573	FBS II 10x100 15/- US A4	310
543574	FBS II 10x120 35/- US A4	310
543575	FBS II 12x70 10/-/- US A4	310
543576	FBS II 12x85 25/10/- US A4	310
543577	FBS II 12x110 10/- US A4	310
543578	FBS II 12x130 30/- US A4	310
543579	FBS II 8x60 10/- SK A4	310
543580	FBS II 8x80 15/- SK A4	310
543581	FBS II 8x90 25/- SK A4	310
543582	FBS II 10x65 10/-/- SK A4	310
543583	FBS II 10x80 25/15/- SK A4	310
543584	FBS II 10x95 10/- SK A4	310
543585	FBS II 10x100 15/- SK A4	310
543586	FBS II 10x120 35/- SK A4	310

art.-no.	article	page
543924	GBN 2,5 x 100	285
543925	GBN 2,5 x 150	285
543926	GBN 2,5 x 200	285
543927	GBN 3,6 x 150	285
543928	GBN 4,6 x 200	285
543929	GBN 4,8 x 280	285
543965	FLS Hand-Schneidewerkzeug	66
544079	FBS-UL	347
544083	FBB-UL FireStop Block	347
544084	FBS-EN (DE, FR, EN, IT)	347
544085	FBS-EN (DK, FI, SE, NO)	347
544086	FBS-EN (PL, SK, CZ, HU)	347
544087	FBS-EN (TR, PT, ES, NL)	347
544088	FBB-EN FireStop Block	347
544089	FIB Insulating Bandage	347
544090	FFBD Foam Barrier Dispenser	347
544589	GS 6/25	176
544590	GS 6/40	176
544591	GS 6/50	176
544592	GS 6/70	176
544593	GS 6/80	176
544594	GS 6/100	176
544595	U 6 x 12	185
544905	FRS-L 120 - 129 Universal	31
544906	FRS-L 130 - 137 Universal	31
544907	FRS-L 138 - 145 Universal	31
544908	FRS-L 146 - 155 Universal	31
544909	FRS-L 156 - 163 Universal	31
544910	FRS-L 164 - 172 Universal	31
545117	FUS 21/1,5 - 2 m	91
545118	FUS 21/1,5 - 3 m	91
545119	FUS 21/1,5 - 6 m	91
545120	FUS 41/1,5 - 2 m	91
545126	FUS 41/1,5 - 3 m	91
545127	FUS 41/1,5 - 6 m	91
545128	FUS 21/1,5 - 3 m fvz	199
545129	FUS 41/1,5 - 3 m fvz	199
545636	FDN II 6/5	316
545637	FDN II 6/35	316
545638	FDN II 6/5 K	316
545639	FDN II 6/35 K	316
545649	FRS 95 - 103 M8/M10	35
545650	VB	131
545651	VB A2	247
545771	VB fvz	228
545834	FHS CLIX 8 x 140	79
545835	FHS CLIX 8 x 190	79
545836	FHS CLIX 10 x 80	79
545853	FIS MR Plus	318
546148	FDCC	97
546322	2K PU 400 PLUS	333
546377	FBS II 6 x 30/5 P	311
546378	FBS II 6 x 40/5 P	311
546379	FBS II 6 x 40/5 LP	311
546380	FBS II 6 x 60/5 P	311
546381	FBS II 6 x 80/25 P	311
546382	FBS II 6 x 30/5 SK	311
546383	FBS II 6 x 40/5 SK	311
546384	FBS II 6 x 60/5 SK	311
546385	FBS II 6 x 80/25 SK	311
546386	FBS II 6 x 100/45 SK	311
546387	FBS II 6 x 120/65 SK	311

art.-no.	article	page
546388	FBS II 6 x 140/85 SK	311
546389	FBS II 6 x 160/105 SK	311
546390	FBS II 6 x 40/5 US	311
546391	FBS II 6 x 60/5 US	311
546392	FBS II 6 x 80/25 US	311
546393	FBS II 6 x 100/45 US	311
546394	FBS II 6 x 120/65 US	311
546395	FBS II 6 x 25 M8/19	312
546396	FBS II 6 x 35 M8/19	312
546397	FBS II 6 x 55 M8/19	312
546398	FBS II 6 x 35 M10/21	312
546399	FBS II 6 x 55 M10/21	312
546400	FBS II 6 x 35 M8/M10 I	312
546401	FBS II 6 x 55 M8/M10 I	312
546506	SXRL 10 x 60 FUS	327
546507	SXRL 10 x 60 FUS A4	327
547492	HK 41 8,5	124
547493	HK 41 10,5	124
547494	HK 41 12,5	124
547494	HK 41 12,5	144
547495	HK 41 12,5 fvz	223
547496	HK 41 10,5 fvz	223
547497	HK 41 12,5 - A4	248
547500	FFF 1	134
547501	FFF 4	134
547502	FAF 2	135
547503	FAF 3	135
547504	FAF 4	135
547505	FAF 4/135°	135
547506	FFF 1 fvz	233
547507	FFF 4 fvz	233
547508	FAF 2 fvz	234
547509	FAF 3 fvz	234
547510	FAF 4 fvz	234
547511	FAF 4/135° fvz	234
547512	FAF 2 A4	246
547513	FAF 4 A4	246
547514	FAF 4/135° A4	246
547515	FFD 22 x 9 x 6	309
550806	EMS 41	168
555005	DUOPOWER 5 x 25	330
555006	DUOPOWER 6 x 30	330
555008	DUOPOWER 8 x 40	330
555010	DUOPOWER 10 x 50	330
555105	DUOPOWER 5 x 25 S	330
555106	DUOPOWER 6 x 30 S	330
555108	DUOPOWER 8 x 40 S	330
555110	DUOPOWER 10 x 50 S	330
557092	G 10/3	176
557270	G 24	176
557295	G 20	176
557297	MU M 16	186
557301	U 12 x 24	185
557303	U 16 x 30	185
579746	G 12/2	176